MITSUBISHI RAYON AQUA SOLUTIONS

STERAPORE 5600 Series (FF)
Instruction Manual

Introduction

This instruction manual describes the outlines, designs, installation, operation,
and maintenance of the STERAPORE 5600 Series (FF).
Please read this manual completely before using this product,
and use the product safely and appropriately.
Keep this manual in a safe place after reading it.
Please confirm the specifications of the products covered by this instruction manual in
[Chapter 10 Specifications].

Table of Contents

For Safe Use

This Instruction Manual indicates precautions that must be followed to prevent injury to the user or other persons, to prevent property damage, and to use the product safely.
These indications and symbols are defined as written below. If you lose or damage this manual, contact the Membrane Department of the Membrane Division at MITSUBISHI RAYON AQUA SOLUTIONS CO., LTD. (p.59). You can find contact details on the last page of this manual.

The extent of injuries and damage that will occur if the precautions are ignored and the product is used incorrectly are indicated as follows.

WARNING	Not following precautions marked with WARNING could lead to death or serious injury*1.
CAUTION	Not following precautions marked with CAUTION could lead to injury*2 or property damage*3.

*1 Serious injury refers to such things as loss of eyesight, injury, high and low temperature burns (burns that occur when the skin is exposed to a heating element that is hotter than body temperature for a long period of time, causing symptoms such as red spots (erythema) and blisters), electric shock, fractures, and/or poisoning, which leave after effects, or require hospitalization or long term treatment at a hospital as an outpatient.
*2 Injury refers to injuries, burns, electric shocks and so on that do not require hospitalization or long term treatment at a hospital as an outpatient.
*3 Property damage refers to widespread damage to buildings, household belongings, livestock and/or pets.

Prohibited actions and actions which must be performed are indicated by the following symbols.

	These symbols indicate actions that are prohibited.
	This symbol indicates actions that must be performed.

Mitsubishi Rayon shall not bear any responsibility for any damage to human lives, property and the like caused by any systems in which this product is included due to improper use that does not follow this instruction manual.

This product requires due care and attention when being installed and used. This instruction manual does not necessarily cover all precautions that need to be followed when installing or using this product.

WARNING

This instruction manual contains descriptions regarding MBR (membrane bioreactor) treatment of domestic and industrial wastewater, and instructions on using devices. Do not use it for any other purposes.	
Do not drink, or take baths or showers using water directly after it has been treated by this product.	
When handling elements or modules, wear protective clothing and follow construction company safety standards to prevent industrial accidents.	
Be sure to wear protective clothing such as goggles and rubber gloves when handling chemicals such as sodium hypochlorite (NaClO - used for membrane cleaning) or acid. If any of these chemicals come into contact with your hands, eyes, or other body parts it may cause loss of eyesight or chemical burns. In this case, thoroughly rinse the affected part and consult a doctor.	

Do not mix sodium hypochlorite (NaClO) and acid under any circumstances. Doing so releases chlorine gas, which is very dangerous. Be sure to take this into account when designing the system.	
As the modules are very heavy, when using forklifts and cranes make sure that all apparatus is inspected and certified, and all operators are certified.	

⚠ CAUTION

Conduct regular inspections and maintenance of the products.	
Move modules with care to prevent them from bumping into pipes or other equipment.	
When attaching lifting chains or wire ropes to modules, ensure that they are kept taut so they do not touch the modules. If the chain or rope touches the upper part of modules, elements will become worn or damaged due to oscillation caused by aeration.	
Use elements with due care to prevent tools, pipes, or other machines from touching the membrane.	
Do not perform construction work that may damage modules, especially membranes, near the products. Exposure to fire is strictly prohibited. Sparks from welding or sanding will damage membranes.	
Store and transport elements and modules within a temperature range of 5 to 40°C, avoid direct sunlight, and store them in a dry location. If elements or modules freeze while they are wet the membrane will be damaged.	
Do not treat wastewater which contains organic solvents and/or chemicals that can swell, damage, or degrade the products. It causes deformation, damage and malfunction.	
Dispose of elements and modules as industrial waste in accordance with laws and local ordinances.	
If there is a danger of chemical leaks that may damage nearby equipment and cause environmental pollution, be sure to take all necessary measures to prevent chemicals from splashing or spilling.	

Chapter 1 MBR Composition and Placement

STERAPORE 5600 Series (FF) hollow fiber membrane modules are submerged membrane modules used for MBR (membrane bioreactor) wastewater treatment. Install the products in a membrane tank and use them for solid-liquid separation.

1-1 Overview of MBR

In conventional activated sludge processing, solid-liquid separation is performed in a settling tank. However, in the MBR system it is performed in a membrane module. Consequently, a settling tank for sludge settling is not required in MBR systems, a high MLSS (mixed liquor suspended solids) concentration can be maintained, and 100% separation of SS (suspended solids) larger than the membrane pore diameter is possible.
Figure 1-1 shows a schematic diagram of conventional activated sludge processing and MBR.

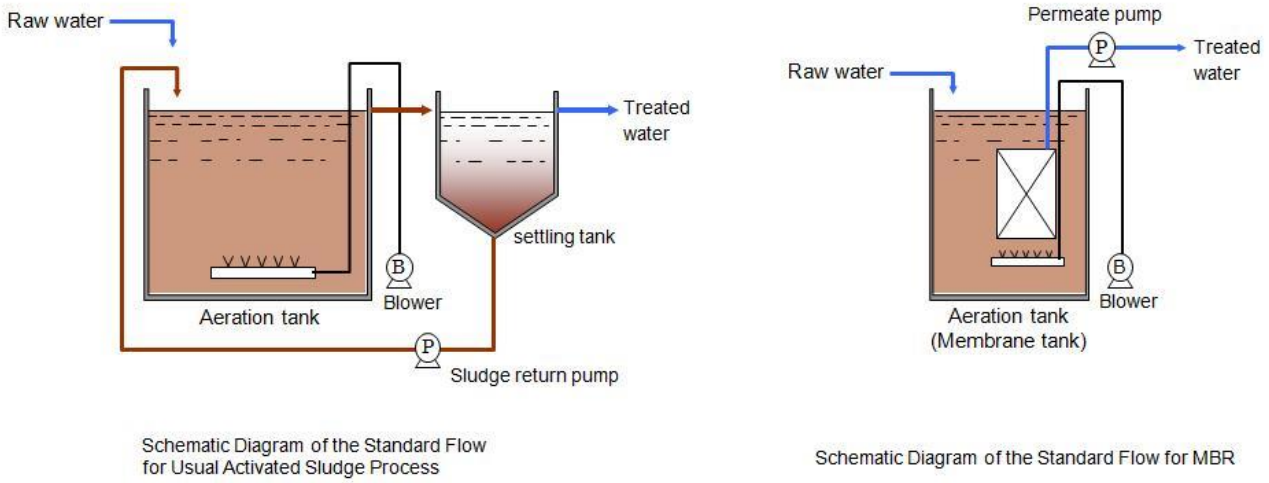

Figure 1-1 Schematic Diagram of Conventional Activated Sludge Processing and MBR

The differences between the MBR process and the conventional activated sludge process, and the advantages of MBR are as follows.

- As the membrane pore diameter is smaller than bacteria (e.g. colon bacillus), clear, safe treated water can be obtained. Treated water can be re-used as greywater, or used as raw water for RO (reverse osmosis) membrane system treatment.
- MBR systems are simple and compact, as a final sedimentation tank is not required.
- As there is no need to allow sludge to settle, the MLSS concentration level in the aeration tank stays high, ranging from around 5,000 to 10,000 mg/L. Consequently, the aeration tank is compact.
- When inorganic coagulant addition is used for dephosphorization, the phosphate elimination rate can be significantly improved.

There are two types of MBR system.

- Integrated MBR systems which place membrane modules in aeration tanks.
- Separate MBR systems which place membrane modules in separate membrane tanks.

Figure 1-2 shows schematic diagrams for both.

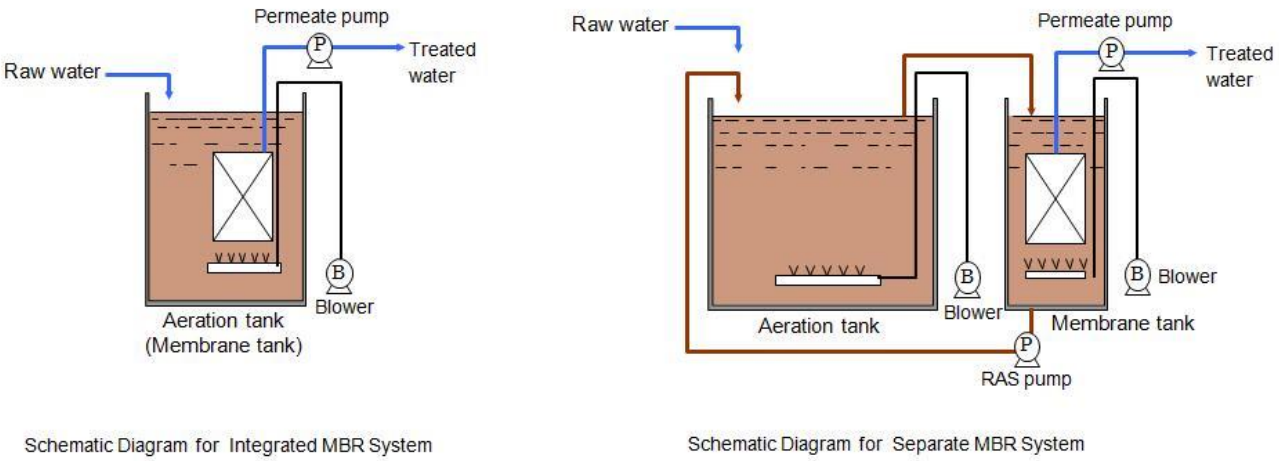

Figure 1-2 Schematic Diagrams of the Integrated MBR System and Separate MBR System

1-2 Composition of MBR Equipment

The MBR system is composed of various components, including membrane modules, chemical cleaning equipment, permeate pumps, blowers, etc.

Figure 1-3 shows an example schematic diagram of an MBR system.

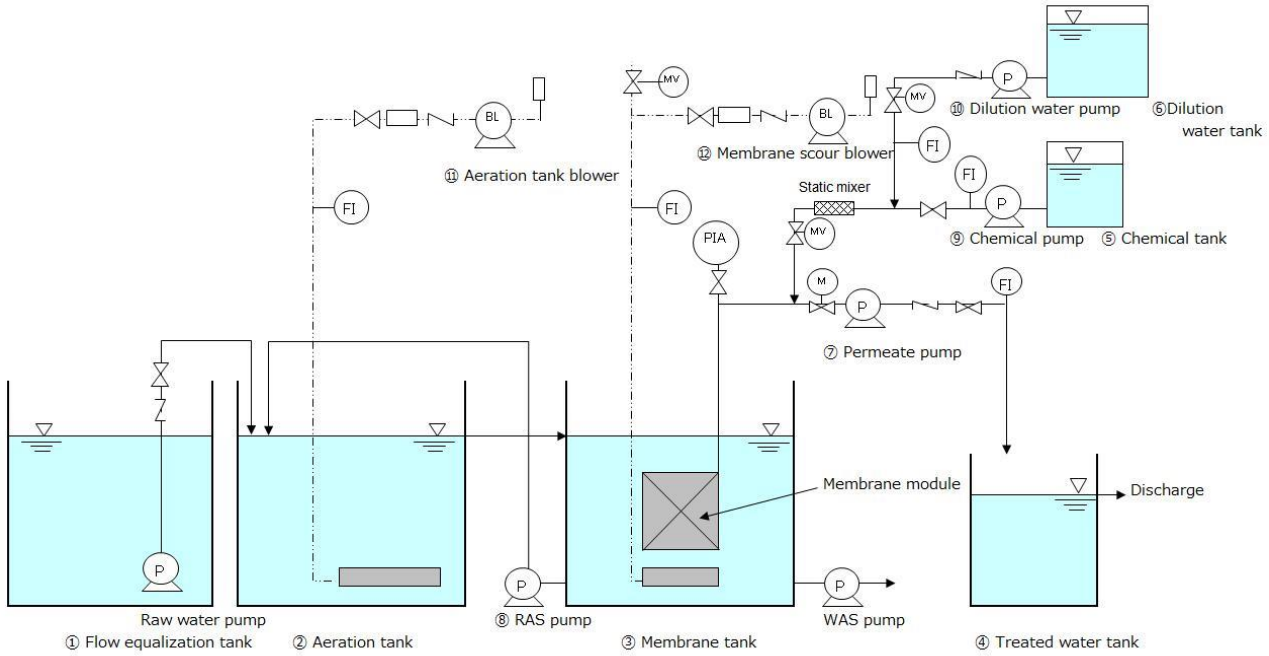

Figure 1-3 Schematic Diagram of an MBR System (Example)

1-2-1 Roles of Main Components and Tanks in the MBR System

① **Flow equalization tank**

As the MBR system is fundamentally operated at a constant flux, a flow equalization tank is installed to mitigate fluctuations in the flow rate. The size of the flow equalization tank differs according to the raw water flow rate and flow rate fluctuations, the treatment capacity of the membrane separation device, etc.

② **Aeration tank**

There are two types of MBR system: integrated MBR systems and separate MBR systems. (See: p.6 “1-1 Overview of MBR”). Additional aeration tanks are required if the biological processing is not completed in the membrane tank. Circulation pumps are then required to control sludge concentration in the reactor and membrane tanks. If a process such as recycled nitrification is used, multiple aeration tanks are required.

③ **Membrane tank**

The tank in which modules are submerged is called a membrane tank.

In integrated MBR systems, the membrane tank also serves as an aeration tank.

As the membrane tank has the highest sludge concentration of all the tanks, it is effective to extract excess sludge from this tank.

④ **Treated water tank**

This is a tank used to store treated water. It sometimes serves as a dilution water tank. When necessary, sodium hypochlorite is added to the water in this tank to disinfect it before it is discharged.

⑤ **Chemical tank**

This is a tank used to store undiluted NaClO used to clean modules. As high temperatures accelerate the decomposition of NaClO, which produces chlorine, install the tank in a well-ventilated location that is not exposed to direct sunlight.

⑥ **Dilution water tank**

This is a tank used to store water for diluting undiluted NaClO. Water that can be stored in this tank includes public water such as city water, or treated water.

⑦ **Permeate pump**

This is a pump used to draw treated water out of the membrane module. A self-suction pump is normally used for this purpose. It is possible to use an ejector, vacuum pump or other equipment that removes air from pipes instead of a self-suction pump. Permeate pumps are operated at a constant flow by installing a constant flow valve on the discharge side or controlling it using an inverter.

⑧ **Return activated sludge pump (RAS pump)**

The RAS pump is required to adjust the sludge concentration of the reactor and membrane tanks. When using recycled nitrification, the pump also circulates nitrified water. The circulation volume is determined primarily by the balance between the sludge concentrations in the reactor and membrane tanks and the target nitrogen removal rate. It is generally about 1 to 3 times the volume of raw water.

⑨ **Chemical pump**

This is a pump used to deliver a constant flow of NaClO from the chemical tank.

⑩ **Dilution water pump**

This is a pump used to send water used to dilute NaClO from the dilution water tank. A metering pump or constant flow valve is used to send a constant flow of dilution water.

⑪ **Aeration tank blower**

This is a blower used to supply air for biological processing to the aeration tank. Select a blower model based on the volume of oxygen required for biological processing, water depth, pipe diffuser properties and so on.

⑫ **Membrane scour blower**

This is a blower used to supply air used to clean modules. The blower model should be chosen according to water depth, the air volume required for cleaning a modules (See p.エラー! ブックマークが定義されていません。 “エラー! 参照元が見つかりません。 エラー! 参照元が見つかりません。”), etc. If the same blower is used for both biological processing and membrane scour aeration, control the volume of membrane scouring air so it remains constant at the designated value.

1-3 MBR Placement

This section describes module layout in the membrane tank and required water depth.

CAUTION

- When using this product, ensure that all of the installation requirements below are met. If these requirements are not met, the product will not function as indicated in the specifications, and/or may deteriorate or become damaged.
- Integrated MBR systems require membrane tanks with a capacity that ensures the HRT (hydraulic retention time) required for biological processing.
- The diffusers are used for biological processing, membrane scouring and in-tank mixing. Make sure that the diffuser equipment (blower, pipe diffuser, etc.) is suitable for all of these uses.
- Place the inlet for raw water as far as possible from modules to prevent undecomposed raw water from coming into direct contact with modules. Otherwise the undecomposed parts of raw water can cause coating and fouling of the membrane which increase the rate of clogging, resulting in unstable operation.

1-3-1 Module Layout

When placing modules in a membrane tank, it is necessary to maintain enough space for sludge moved upward through the modules by aeration to move downward.

- Maintain the following depthwise center-to-center clearance. (See Figure 1-4)
  For modules using 56E0040SA elements: 2.2 m or greater (distance to the wall: 1.1 m or greater)
- Maintain enough widthwise clearance for pipe placement etc.

CAUTION

- A lack of sufficient clearance will prevent stable operation.

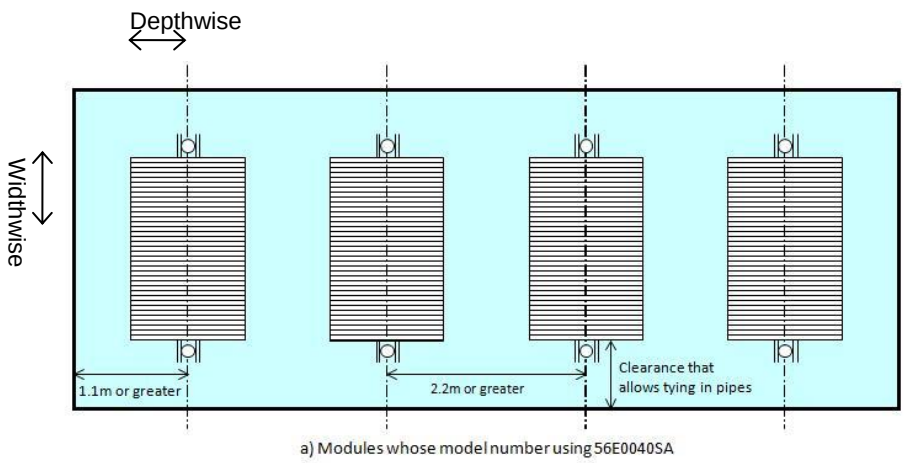

Figure 1-4 Module Layout

1-3-2 Minimum Water Depth

Leave space above the modules when installing them in the membrane tank to allow swirl flow to be evenly created. See Table 1-1 for minimum water depth for each module.

CAUTION

A failure to secure the minimum water depth will prevent stable operation.

Table 1-1 List of Minimum Water Depths

Module model number	56M0400FF	56M0800FF	56M1200FF	56M1600FF	56M2400FF
Number of elements	10	20	30	40	60
Minimum water depth (m)	3.0	3.0	3.0	3.0	3.0

Chapter 2 Filtration and Membrane Scour Aeration

2-1 Filtration

2-1-1 Notes Regarding Filtration Design

- **Incorporate an emergency filtration-stop function into the system.**
  If the air for cleaning the membrane module stops, continuing filtration results in the fixation of sludge and a rise in trans membrane pressure. Configure a system where the air flow, pressure, etc. of the blower are detected and an alarm is triggered/operation is stopped when necessary, as cutting the blower belt will not be detected as the blower stopping.

- **Design the filtered water line so that siphoning does not occur when filtration is stopped.**
  Due to siphoning or gravity filtration, filtration may continue even when the permeate pump is suspended during intermittent filtration operation. As membrane surface scouring (Figure 2-1) cannot be carried out while the pump is stopped, if filtration continues the trans membrane pressure will rise quickly. Install an automatic valve in the filtered water line or a siphon breaker behind the permeate pump to block the flow of filtered water completely while the pump is stopped.

2-1-2 Configuring Flux Settings

Set the filtration mode to constant rate filtration.

For reference:	Flux (daily average):	0.2 to 0.8 $m^3/(m^2 \cdot d)$
	During membrane cleaning (2 to 3 hours):	0.3 to 1.2 $m^3/(m^2 \cdot d)$

Trans membrane pressure rises as operation continues. It is important to monitor the fluctuations in trans membrane pressure.
(See p.41 “6-2 Operation Management”)

CAUTION

- As the appropriate flux value differs according to the type of raw water used, water temperature, and facility management methods, carefully consider these factors in advance.
- Flux shown here is a daily average. The actual instantaneous flux during filtration is larger than this value due to intermittent filtration as described on page 13.

2-1-3 Permeate Pumps

Determine the pump specifications on the basis of flow rate, pump location, actual pump head, pipe resistance, and so on.

REFERENCE

- Choosing a self-suction pump as the permeate pump makes it easy to maintain suction pressure during intermittent filtration operation. Furthermore, air in pipes can be easily discharged if operation is resumed after being stopped for chemical cleaning or similar. It is possible to select an ejector, vacuum pump or other equipment that removes air from pipes instead of a self-suction pipe.

- Trans membrane pressure* is normally around -5 to -30 kPa in MBR systems.
  * The difference between the pressure during filtration and the pressure during relaxation.
- Constant rate filtration is conducted by installing a constant flow valve on the discharge side of the permeate pump or controlling the permeate pump inverter.
- Set the alarm pressure and the abnormal stop pressure for the permeate pump. If the alarm pressure is exceeded, perform chemical cleaning immediately. The alarm and abnormal stop pressures may be set at values considered to be appropriate.

CAUTION

- Depending on how the permeate pump and pipes are installed, air pockets that prevent stable operation of the product can occur in pipes. Deaeration equipment may be required, particularly when using large diameter pipes. For small scale facilities, it is also possible to prevent air pockets by locating the permeate pump at the highest position in the water treatment line.

2-1-4 Configuring Intermittent Filtration Settings

Relaxation time, in which membrane surface cleaning is conducted, must be provided between suction intervals for stable treatment using the MBR system. Conduct intermittent filtration at the following interval.

Filtration time: 7 minutes or less
Relaxation time: 1 minute or longer

CAUTION

- Consecutive filtration with no relaxation time may result in sludge floc and fine particles being deposited onto and adhering to the membrane surface, making continued operation difficult. Make sure that relaxation time is provided.
- In the filtration process, continue aeration even during relaxation time. Only suspend aeration during diffuser and chemical cleaning.

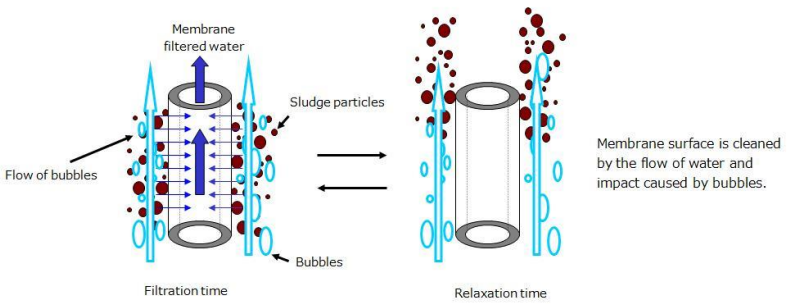

Figure 2-1 Conceptual Diagram of Membrane Cleaning

2-2 Membrane Scour Aeration Devices

- The aeration flow rate for module cleaning is 75 to 150 $Nm^3/(m^2 \cdot h)$ (standard aeration flow rate: 125 $Nm^3/(m^2 \cdot h)$)*.
  * Calculated based on the area to be aerated (upflow section).
- Refer to Table 2-1 for the aeration rate for each module.
- With integrated MBR systems the amount of air required to clean the module must be aerated from the bottom of the module. If there is not enough air for biological processing, aerate in a location where swirl flow is not inhibited.
- We recommend establishing means (an air flow meter and blower manometer) for monitoring the state of aeration.

WARNING

- Suspend filtration when aeration is stopped.

CAUTION

- Use the product within the standard aeration flow rate range, as continued aeration above 150 $Nm^3/(m^2 \cdot h)$ or greater may result in damage to elements.
- If the same blower is used for both biological processing and membrane scour aeration, control the volume of membrane scouring air at the constant, specified value.
- In the filtration process, continue aeration even during suction relaxation time.
- Take care when setting conditions below the standard aeration flow rate as the membrane can easily become clogged.
- As the aeration flow rate may be raised to strengthen membrane scouring, install the blower so that an aeration flow rate of 150 $Nm^3/(m^2 \cdot h)$ can be guaranteed.

Table 2-1 List of the Aeration Rate for Module Cleaning (unit: Nm^3/min/module)

Module model number	56M0400FF	56M0800FF	56M1200FF	56M1600FF	56M2400FF
Number of elements	10	20	30	40	60
Minimum aeration rate	0.8	1.5	2.2	2.9	4.4
Maximum aeration rate	1.7	3.1	4.5	5.9	9.0
Standard aeration rate	1.5	2.7	3.8	5.0	7.7

Minimum aeration rate : Aeration flow rate of 75 $Nm^3/(m^2 \cdot h)$
Maximum aeration rate: Aeration flow rate of 150 $Nm^3/(m^2 \cdot h)$
Standard aeration rate: Aeration flow rate of 125 $Nm^3/(m^2 \cdot h)$

2-3 Cleaning the Diffuser

The FB diffusers embedded in the module are SUS perforated pipe diffusers. When SUS perforated pipe diffusers are used for long periods of time, sludge may enter the diffusers, dry, and block the holes. Therefore they must be cleaned regularly to stop the sludge from drying.

The diffuser cleaning process is composed of two processes, feeding and discharging. In the feeding process, air supply from the permeate pump and blower to the diffuser is stopped, and the MV automatic valve in the branch line installed in the pipe is opened, which allows water in the tank to flow into the diffuser. In the discharging process, the MV automatic valve is closed, the air supply is restored and the tank water in the diffuser is discharged.

Clean diffusers once every 1 to 6 hours with the inflow time kept to around 1 minute. When air supply is resumed by closing the MV automatic valve in the branch line, sludge will be discharged within approximately 10 seconds and aeration will be resumed. Resume filtration after aeration has resumed. As the time it takes to resume aeration after the blower starts up depends on piping and the blower's capacity, configure a delay timer or similar accordingly to cover the time between the blower starting and the permeate pump starting.

Make sure that the diffuser cleaning operation is automatic.

As diffusers tend to clog if sludge is very concentrated and/or viscous, adjust the cleaning frequency and inflow time accordingly. Sometimes, they may have to be set to values higher than those stated above.

If the diffuser is clogged, stop filtration and clean the diffuser. If the clogging is light, clean the diffuser normally several times consecutively or feed clean water into the diffuser. If the diffuser is badly clogged, remove it from the tank and clean it.

❑ Diffuser cleaning method (example)

1. **Suspend air supply to the diffuser.**
   Stop the blower. To clean individual blowers when a group of multiple blowers is used to supply air, install automatic valves in branch pipes and close them.
2. **Open the automatic valve in the exhaust line, to allow air in the pipes to be discharged into the atmosphere and sludge to flow in.**
   Pay attention to noise caused by air discharging. Use a manometer to confirm that enough air has been discharged.
3. **Restart suction.**
   After 1 minute, start up the blower, and after a further 30 seconds, start up the permeate pump.

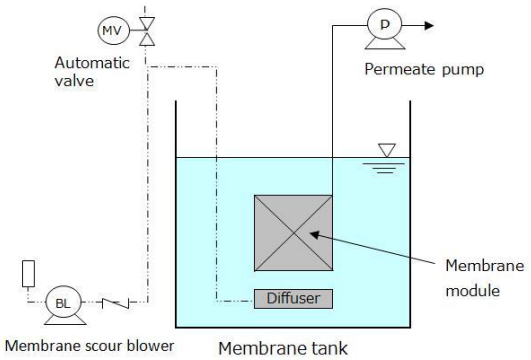

Install an exhaust line and an automatic valve in the pipe between the blower and the diffuser.
Let tank water flow into the diffuser by suspending the supply of air to the diffuser, opening the automatic valve, and releasing pressure.

Figure 2-2 Feeding Tank Water for Diffuser Cleaning

CAUTION

- When designing the piping, make sure that tank water flowing backward through the diffuser does not flow into the blower while the blower is stopped.
- When feeding clear water into the diffuser, take sufficient care not to let water flow backward into the blower.

Chapter 3 Chemical Cleaning

This section describes cleaning equipment such as chemical tanks and chemical pumps and cleaning procedures.

WARNING

- Handle each chemical according to its SDS*.
- Wear protective clothing when handling elements and modules.
- Be sure to wear protective clothing such as goggles and rubber gloves when handling chemicals such as sodium hypochlorite (NaClO) used for membrane cleaning or acid. If any of these chemicals come into contact with your hands, eyes, or other body parts it may cause loss of eyesight or chemical burns. In this case, thoroughly rinse the affected part and consult a doctor.
- Mixing sodium hypochlorite (NaClO) and acid releases chlorine gas, which is very dangerous. Do not mix these chemicals under any circumstances. Be sure to take this into account when designing the system.

* SDS (Safety Data Sheet) is a type of Safety Data Sheet. Safety data sheets are documents that provide information about the characteristics of chemicals and how to handle them, and are submitted when transferring or supplying products that contain the applicable chemicals to other businesses.

3-1 Chemical Cleaning

This section includes chemical cleaning procedures, notes and other information.
Be sure to handle each chemical according to its SDS.

CAUTION

- Monitor the suction pressure of the module and prevent the pressure from exceeding the set value (the initial value of suction pressure -15 kPa (trans membrane pressure index, negative pressure)). The system must be configured so an alarm is triggered if the suction pressure exceeds the set value. If this happens, perform chemical cleaning immediately to restore the suction pressure.

Normally, NaClO is used as the chemical solution for cleaning MBR systems, as clogging is primarily caused by organic matter. However, as clogging caused by inorganic matter increases gradually when the system is used for long periods, acid cleaning using acidic chemicals should be performed when necessary.

There are three types of chemical cleaning using NaClO and/or acid.
① Maintenance cleaning (NaClO)
② Recovery cleaning (NaClO and acid)
③ Chemical soak cleaning

Normally, system performance is maintained using a combination of maintenance cleaning (①) about once a week and recovery cleaning (②) once every 3 months (or when suction pressure exceeds the set value). These are both cleaning in place (CIP) methods: A chemical solution is injected from the permeate pump side (hereinafter referred to as "permeate side") with the module immersed in the membrane tank.
If the trans membrane pressure is not restored during recovery cleaning (②), or sludge has adhered between membranes due to device problems or other reasons, perform chemical soak cleaning (③) by removing the module from the tank, washing it with water, and then immersing it directly in a chemical solution.

3-1-1 Cleaning Methods

- **Maintenance cleaning**

  Maintenance cleaning is performed to remove membrane surface fouling regularly to inhibit thickening of the cake layer and prevent the trans membrane pressure from rising for stable operation of the product.

  Follow the procedure below to perform maintenance cleaning.

1. **Suspend aeration.**
2. **Inject NaClO.**
   If flux is set high (0.4 $m^3/(m^2 \cdot d)$ or greater), inject NaClO with an effective chlorine concentration of 300 to 500 mg/L in the amount of 2 L/m^2 per unit membrane area plus the piping volume at a constant rate from the permeate side for 15 to 30 minutes about once a week.
3. **Restart steady operation.**

REFERENCE

- Normally, NaClO with an effective chlorine concentration of 300 to 500 mg/L is sufficient, but NaClO with an effective chlorine concentration of about 300 to 1,000 mg/L may be used when membrane clogging is a concern.
- Maintenance cleaning can be omitted if flux is set low (0.4 $m^3/(m^2 \cdot d)$ or less), when treating domestic wastewater on a small scale.

- **Recovery cleaning**

  Recovery cleaning, which is performed every 3 months or when the suction pressure (the trans membrane pressure index) has exceeded the set value (the initial value of suction pressure -15 kPa as the absolute value) (i.e., when the trans membrane pressure rises), is intended to remove element fouling and restore the trans membrane pressure close to its initial value.

  Follow the procedure below to perform recovery cleaning.

1. **Suspend aeration.**
2. **Inject NaClO.**
   Inject NaClO with an effective chlorine concentration of 3,000 mg/L in the amount of 2 L/m^2 per unit membrane area plus the piping volume at a constant rate from the permeate side for 30 minutes.
3. **When the NaClO has been injected, leave the module as it is for 30 to 90 minutes.**
4. **Start up the dilution water pump, and restart the removal of chemicals in the system and aeration. Between 0 to 15 minutes after aeration restarts, restart suction and return to steady filtration operation.**
5. **If trans membrane pressure is still high after recovery cleaning by NaClO, perform in place using acid. Refer to “3-1-2 Acid Cleaning” (p.21) for information on acid cleaning.**

- **Chemical soak cleaning (Off line cleaning)**

  Chemical soak cleaning is performed when recovery cleaning has not restored the trans membrane pressure, or when sludge has adhered between membranes due to device problems or other reasons (clogging). The whole module is immersed in a chemical solution for a long period of time to remove fouling and restore the trans membrane pressure close to its initial value. Chemical soak cleaning cleans more effectively than recovery cleaning.

  Follow the procedure below to perform chemical soak cleaning.

  Concentration of chemicals and immersion time

  For NaClO (effective chlorine concentration 3,000 mg/L): 6 to 24 hours

  For acid (oxalic acid or citric acid: 1 to 2 %, sulfuric acid or hydrochloric acid: 0.1 to 0.5 N): 2 to 4 hours

  To clean modules

1. **Wash the module with water. Then immerse it in the washing tank.**
2. **Immerse the module in the chemical soak cleaning tank under the conditions stated above Figure 3-1.**
3. **After soaking, wash the module with water again.**
4. **For separate MBR systems, the modules may also be left in the membrane tank to soak, with the sludge in the tank being replaced with chemicals.**

  To clean elements

1. **It is possible to extract elements from the module and immerse them in a washing tank in order to save chemicals Figure 3-2. In this case, wash the elements with water after extracting them from the module and then immerse them in the washing tank.**

WARNING

- Mixing sodium hypochlorite (NaClO) and acid releases chlorine gas, which is very dangerous. Do not mix these chemicals under any circumstances.

CAUTION

- As the modules are very heavy, when using forklifts and cranes make sure that all apparatus is inspected and certified, and all operators are certified.
- If there is a danger of chemical leaks that may damage nearby equipment and cause environmental pollution, be sure to take necessary measures to prevent chemicals from splashing or spilling.
- Drained water that was used for washing must either be returned to the equalization tank and reprocessed, or disposed of as industrial waste according to relevant laws and local regulations.
- Used chemicals must be disposed of as industrial waste according to relevant laws and local regulations.

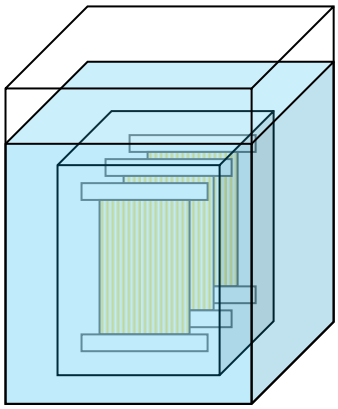

Figure 3-1 Diagram of a Module Immersed in a Washing tank

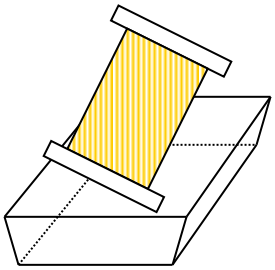

Figure 3-2 Diagram of a Membrane Element Immersed in a Washing Tank

3-1-2 Acid Cleaning

Although NaClO cleaning effectively removes organic contamination, it has no effect on inorganic contamination. Cleaning only with NaClO will result in inorganic matter causing a rise in trans membrane pressure. Perform acid cleaning once a year if the product is used for municipal wastewater treatment.

Either the same process as recovery cleaning or chemical soak cleaning process is used in acid cleaning.
If the trans membrane pressure is high after cleaning with NaClO, perform recovery cleaning according to the following procedure. See Table 3-1 for the standard injection amount and injection time.

1. **Adjust the acidic solution and put it into the dilution water tank.**
2. **Activate the dilution water pump and inject the solution from step 1. into the membrane module.**

Refer to “Chemical soak cleaning (Off line cleaning)” (p.19) for the chemical soak cleaning procedure. See Table 3-1 for the standard injection amount and injection time.

With a small module, it is possible to inject chemicals by preparing a chemical tank in addition and connecting it to the filtration line, taking advantage of the difference in water level between the membrane tank and the chemical tank (See Figure 3-3). It is recommended to make the difference in water level 1 m or greater.

WARNING

⊘ Mixing sodium hypochlorite (NaClO) and acid releases chlorine gas, which is very dangerous. Do not mix these chemicals under any circumstances.

Table 3-1 Types of Chemical Cleaning

Type of cleaning	Cleaning frequency	Effective chlorine concentration (for NaClO)	Injection amount	Injection and immersion time
Maintenance cleaning (NaClO)	Depends on design flux. At most once a week	NaClO 300 to 500 mg/L	2 L/m^2+ α*1	Injection time: about 15 to 30 minutes
Recovery cleaning (NaClO)	Once every 3 months or when the trans membrane pressure reaches the upper limit*2	NaClO 3,000 mg/L	2 L/m^2+ α*1	Injection time: about 30 minutes Settling time: about 90 minutes
Recovery cleaning (acid)	Once a year	Oxalic acid or citric acid 1 to 2 wt%	2 L/m^2+ α*1	Injection time: about 30 minutes Settling time: about 90 minutes
Chemical soak cleaning (NaClO)	When trans membrane pressure is not restored by maintenance/recovery cleaning. When problems such as clogging occur.	NaClO 3,000 mg/L	Enough to immerse a module	About 6 to 24 hours
Chemical soak cleaning (acid)	When trans membrane pressure is not restored by maintenance/recovery cleaning	Oxalic acid or citric acid 1 to 2 wt% Hydrochloric acid or sulfuric acid 0.1 to 0.6N	Enough to immerse a module	About 2 to 4 hours

＊1 2 L/m^2 (membrane surface area) + α (connection pipe volume)
＊2 Recommended value: Initial trans membrane pressure (negative pressure) -15 kPa

3-1-3 Precautions Regarding Chemical Cleaning

- **Handling Chemicals**

  Chemicals such as NaClO, and oxalic, citric, sulfuric, and hydrochloric acid are used in chemical cleaning.

  CAUTION

  Wear safety goggles and protective gloves and handle chemicals appropriately with due consideration for the environment and safety by referring to SDS and other relevant information.

- **Countermeasures Against Raw Water Inflow During Chemical Cleaning**

  Raw water inflow during chemical cleaning, particularly chemical soak cleaning, temporarily disables or impedes processing. Implement appropriate measures in accordance with the state of equipment to prevent raw water from overflowing.

  Example measures are shown below. Each of the following measures can be implemented individually or in combination with others.

  - If there is a flow equalization tank, set the water level of the flow equalization tank to the minimum before cleaning.
  - If multiple modules or lines of modules are operated, clean them in several batches.
  - It is also possible to adjust the flux through an operating module to control the total treatment flow.
  - Restrict raw water inflow if possible, e.g. in a factory, etc.
  - Perform cleaning when the raw water inflow is low (for instance, on Saturday, Sunday or at night).

  CAUTION

  If raw water inflow is expected to increase due to rain or other reasons, finish cleaning before it increases or postpone cleaning.

- **Residual Free Chlorine in Membrane Treated Water After Maintenance Cleaning**
  - Some of the NaClO used in maintenance cleaning is discharged into the membrane tank. Residual chlorine discharged is deactivated by sludge under the conditions stated in this manual. Therefore it does not affect biological processes or the quality of treated water.

- **Residual Free Chlorine and Acid in Membrane Treated Water after Recovery Cleaning**
  - Some of the chemical solution used in recovery cleaning is discharged into the membrane tank. Residual chlorine discharged is deactivated by sludge under the conditions stated in this manual. Therefore it basically does not have much effect on biological processes. Residual acid may sometimes lower the pH in the tank, but it also basically does not have much effect on biological processes.
  - Chemical solutions that remain in the system are discharged with treated water when the filtration process starts. Therefore they may temporarily affect the properties of the treated water. Although the concentration of chemicals declines sharply as filtration progresses, the effluent quality may cause problems with discharge water quality control. If necessary, take the following measures.
    - Adjust the pH levels
    - Return the first cycle to the equalization tank or similar and reprocess it
    - Process the first cycle as waste chemicals (as the amount of waste chemicals differs according to the treatment volume of the facility and the state of piping it must be calculated individually)

- **Releasing Air From Pipes for Maintenance and Recovery Cleaning**
  - If air remains in pipes for cleaning, air lock can occur during chemical cleaning, preventing chemical solutions from being distributed throughout the hollow fiber membrane. Be sure to release air from the cleaning line.

REFERENCE

- With permanent piping, in general once air is released (e.g. during commissioning), it is not necessary to release air from piping each time cleaning is performed. Release air from the cleaning line by running the chemical and dilution water pumps while the permeate pump is running.

  - In a small modules, if chemical solution is fed by using temporary tanks and hoses using a pump or a difference in water level Figure 3-3, release air from the hose connecting valve B and valve C before connecting it to the membrane tank. If the hose is connected to the valve on the module side (valve A) after opening it, liquid in pipes will drain down and cause air to flow in. Therefore, open the valve on the module side (valve A) after connecting the hose to it.
    Adjust the flow rate by adjusting how open the valves are.

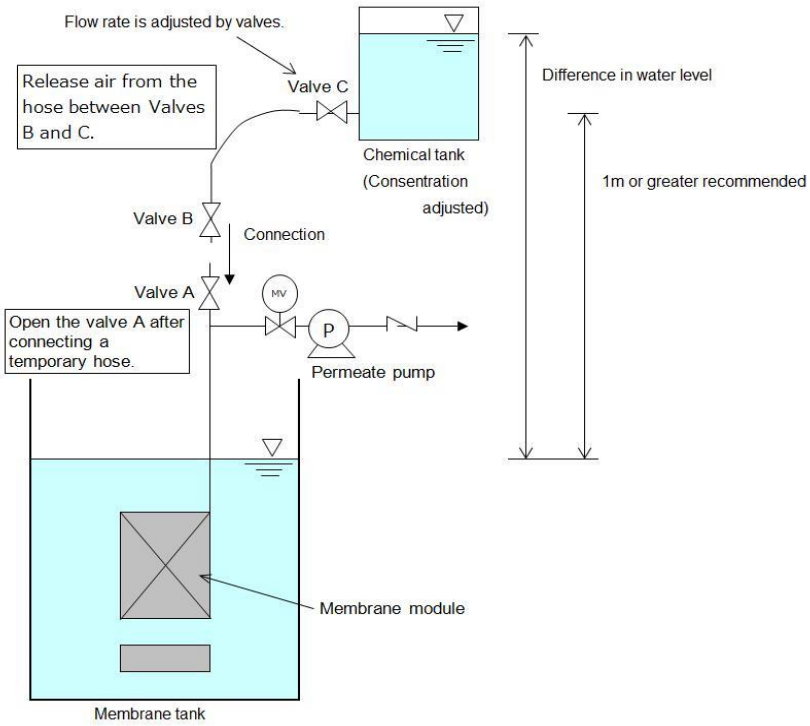

Figure 3-3 Schematic Diagram of Chemical Cleaning Equipment Using Temporary Tanks and Pipes

- **Chemical Soak Cleaning**

WARNING

- After lifting the module, rinse it under running water and remove any adhered sludge before immersing it. Do not use a high pressure washer to clean elements as it may damage the membrane.
- Do not stand underneath the modules when they are being lifted.
- Take measures to prevent wastewater used to clean modules and elements from being discharged outside of the premises. This wastewater should normally be returned to the raw water or aeration tank.
- Dispose of chemical solutions used in chemical soak cleaning appropriately in accordance with laws and regulations. Dispose of NaClO wastewater after reducing it with sodium thiosulfate. Dispose of acid wastewater after neutralizing it with sodium hydroxide.
- If NaClO and acid are mixed poisonous chlorine gas is released, which is very dangerous. If NaClO cleaning and acid cleaning are performed consecutively, thoroughly wash the elements, attached equipment, and tanks with water between these cleaning processes.

CAUTION

- Do not allow sludge and the like to contaminate the inside of the suction line during chemical soak cleaning. Disassemble the connection between the suction hose and the suction pipe after cleaning it with water and block its opening with plastic bags, tape, etc. If the suction line is contaminated, the quality of the water (number of coliform group bacteria, turbidity etc) will deteriorate. In this case, the system must be decontaminated.
- Activate the permeate pump after activating the membrane scour blower when resuming operation.

3-2 Cleaning Equipment

For maintenance cleaning and recovery cleaning, a chemical tank, chemical pump, dilution water tank, and dilution water pump are required. Figure 3-4 shows a schematic diagram of cleaning equipment. Refer to the example calculations in 3-2-1 and select pumps and instruments so the amount of chemical solution can be adjusted.

This diagram shows a procedure in which undiluted chemical solution and dilution water are mixed and then injected. The concentration of the chemical solution can also be adjusted in advance and then injected. For chemical soak cleaning, a washing tank is required in addition.

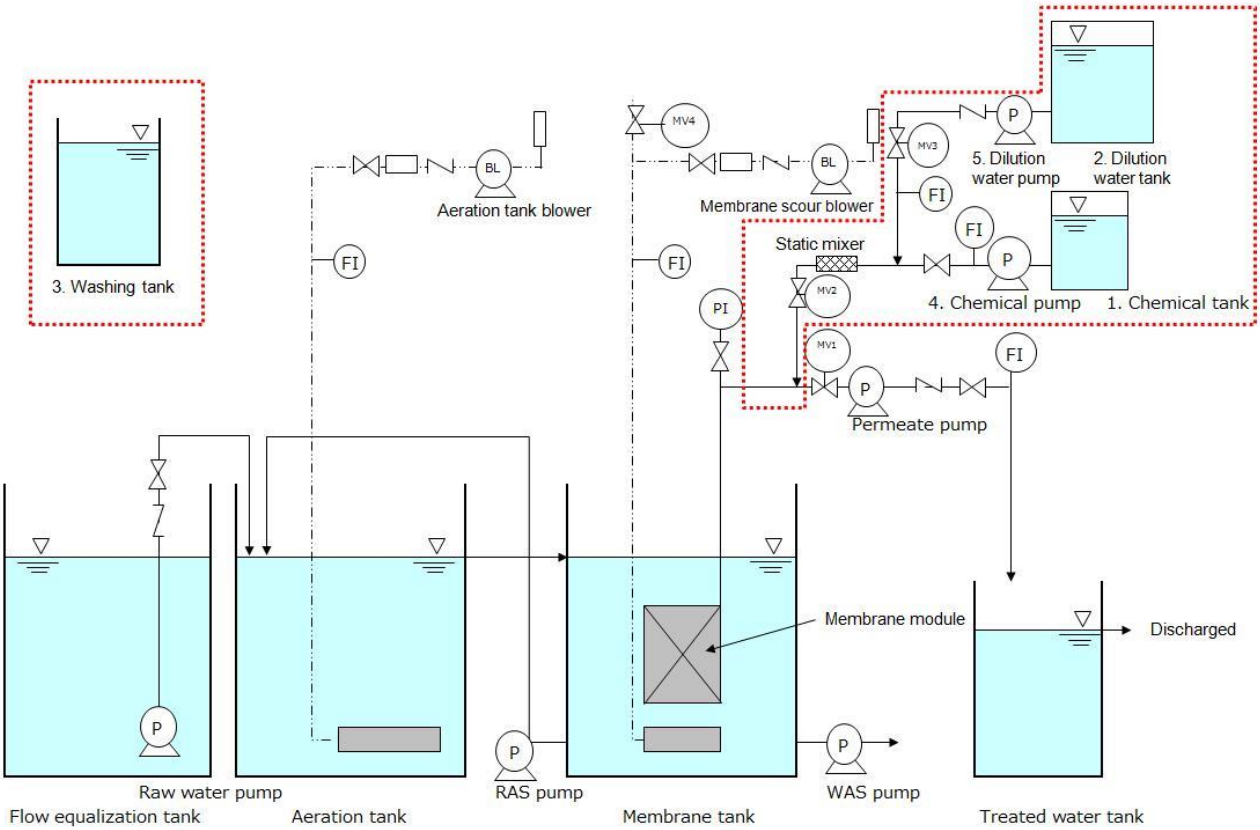

Figure 3-4 Schematic Diagram of Chemical Cleaning Equipment
(the sections surrounded by dotted lines show chemical cleaning equipment)

3-2-1 Device and Equipment Design

- **Chemical tank (NaClO storage tank)**

  This is a tank used to store chemicals (NaClO). NaClO is corrosive.

  ■Design example

  Tank capacity: The amount used in 1 to 2 months (calculated including maintenance cleaning and recovery cleaning)

  Tank material: PE, FRP, etc.

  Installation location: Indoors, or a shaded, well ventilated location.

  ■Example of a calculation for the amount of NaClO used in 2 months per 56M0800FF unit

  Assume that the concentration of undiluted NaClO solution is 12 % and that its specific gravity is 1.19.

  - Maintenance cleaning

    $800\ m^2 \times 2\ L/m^2 \times 500\ mg/L \div 12\ \% \div 1.19\ g/cm^3 \times$ once/week × 8 weeks/2 months = 45 L
  - Recovery cleaning

    $800\ m^2 \times 2\ L/m^2 \times 3{,}000\ mg/L \div 12\ \% \div 1.19\ g/cm^3 \times$ once = 34 L

  The total of the above is 79 L.

  Take into account loss equivalent to the guide pipe capacity when choosing a chemical tank.

- **Dilution water tank**

  This is a tank used to store the dilution water for NaClO.

  ■Design example

  Dilution water: Tap water, membrane treated water, etc.

  Tank capacity: Must be greater than or equal to the amount required for a single cleaning cycle

  Supply method for dilution water: Automatic.

  ■Example of a calculation for the amount of NaClO used per 56M0800FF unit

  $800\ m^2 \times 2\ L/m^2 = 1.6\ m^3$ (Tank capacity: $1.6\ m^3$ + guide pipe capacity ⇒ $2\ m^3$)

WARNING

⃠ The following are not suitable for use as dilution water.

- Treated water which has a high residual ammonium concentration:
  NaClO reacts with ammonium to become chloramine, reducing NaClO activity.
- Water with a high concentration of polyvalent metal ions such as iron and manganese ions:
  It reacts with NaClO to precipitate solid content in the membrane.

- **Washing tank**

  This is a tank in which modules are immersed in chemical soak cleaning.

  ■Design example

  Capacity: Large enough and deep enough to accommodate several modules at one time.

- **Chemical pump**

  This is a pump used to deliver NaClO from the chemical tank.

  ■Design example

  Pump type: A variable meter pump. The chemical pump may be shared for maintenance cleaning and recovery cleaning. In this case, choose a pump based on the flow rates for both.

■Example of a calculation for the flow rate of a chemical pump per 56M0800FF unit (excluding the amount corresponding to the capacity of the guide pipe)

Assume that the concentration of undiluted NaClO solution is 12 % and that its specific gravity is 1.19.

- Maintenance cleaning
  800 m^2 × 2 L/m^2 × 500 mg/L ÷ 12 % ÷ 1.19 g/cm^3 ÷ 30 min = 0.19 L/min
- Recovery cleaning
  800 m^2 × 2 L/m^2 × 3,000 mg/L ÷ 12 % ÷ 1.19 g/cm^3 ÷ 30 min = 1.12 L/min

● **Dilution water pump**

This is a pump used to dilute NaClO fed by a chemical pump. Homogeneously mix the dilution water in an in-line mixer (static mixer) after it flows into the NaClO pipe.

■Design example

Pump type: A variable meter pump. Use a pump that can be used for both maintenance and recovery cleaning.

■Example of a calculation for the flow rate of the dilution water pump per 56M0800FF unit (excluding the amount corresponding to the capacity of the guide pipe)

800 m^2 × 2 L/m^2 ÷ 30 min = 53.3 L/min

3-2-2 Cleaning Process Program

As maintenance cleaning and recovery cleaning are basically performed automatically, it is recommended to incorporate these processes into a program in advance.
On the basis of the schematic diagram of chemical cleaning equipment (p.25, Figure 3-4), an example of a time chart for recovery cleaning is shown in Table 3-2 for your reference.

Table 3-2 Reference Example of a Time Chart for Chemical Cleaning Processes

Process	Process number	Operation	Timer setting (minutes)	Permeate pump	Membrane scour blower	RAS pump	NaClO pump	Dilution water pump	MV1	MV2 MV3	MV4	Remarks
A Filtration	A-①	Filtration operation	7	○	○	○	×	×	○	×	×	Repeat A-① and A-② alternately.
	A-②	Filtration suspension	1	×	○	○	×	×	×	×	×	
B Diffuser cleaning	B-①	Feeding tank water	0.5	×	×	○	×	×	×	×	○	
	B-②	Discharging tank water	0.5	×	○	○	×	×	×	×	×	Go to A−① after completion.
C Chemical cleaning	C-①	Injecting NaClO out	30	×	×	×	○	○	×	○	×	
	C-②	Settling	90	×	×	×	×	×	×	×	×	Not required during MC
	C-③	Aeration before refiltration	0 to 15	×	○	○	×	○	×	×	×	Go to A−① after completion.
D Recovery cleaning process	D-①	Pushing NaClO out	30	×	×	×	○	○	×	○	×	
	D-②	Settling	90	×	×	×	×	×	×	×	×	
	D-③	Aeration before refiltration	0 to 15	×	○	○	×	×	×	×	×	Go to the process A−① after completion.
	D-③'	Pushing NaClO out	0 to t	×	○	○	×	○	×	○	×	Implement when necessary. Start at same time as above. " t " differs according to the pipe capacity.

○: Pump/blower is operating, MV is open
×: Pump/blower is stopped, MV is closed
MC: Maintenance cleaning

Chapter 4 Pretreatment

4-1 Pretreatment

The aims of pretreatment are as follows.

- To prevent inflow of raw water that may inhibit the MBR system's functions and damage MBR facilities.
- To use devices safely and stably.
- To effectively carry out biological processes.

This section describes these pretreatment procedures.

4-1-1 Pretreatment of Raw water

- **Screenings (impurities such as fibers, hairs, and plastic debris in raw water)**

  Remove screenings using a screen.

CAUTION

Use screens (drum screens or wedge wire screens from which fibers and hairs can be removed) with openings of 0.5 to 1 mm.

- **pH (acidity or alkalinity)**

  If raw water is acidic or alkaline, add neutralizer to raw water to adjust its pH to neutral (around 6 to 8). If raw water is so strongly acidic or alkaline as to make it difficult to neutralize it using one-step treatment, two-step treatment may be required. Sulfuric acid or caustic soda is generally used as a neutralizer. Operate a pH meter and a chemical feeding pump together to control the amount of neutralizer added.

- **Grease and oil**

  Grease and oil widely cover the membrane surface and clog its micropores, preventing stable operation of the system. Grease and oil can be quantitatively analyzed as hexane extracts. They can further be separated into animal and vegetable fats and oils and mineral oils, and the amount of each of these can then be determined. Treatment methods for grease and oil include natural flotation and dissolved air flotation (DAF). If the grease and oil content exceeds 150 mg/L, please reduce it to 150 mg/L or less using these methods or similar.

  Animal and vegetable fats and oils can be decomposed in a biological process tank if their concentration is 20 % or less of BOD, by keeping the BOD-SS load at or below 0.1 kg-BOD/(SS·day).

  As mineral oils do not biodegrade easily, they have a worse impact on the membrane than animal and vegetable fats and oils. As a rule, avoid mixing mineral oils into raw water.

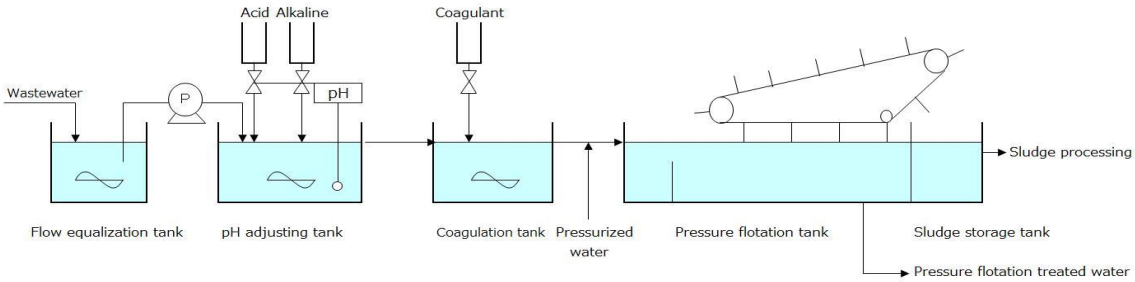

Figure 4-1 Example Procedures for Wastewater That Contains Oils

- **Water temperature**

  If raw water temperature or aeration tank temperature rises to 40°C or above, biological processing performance declines. In particular, nitrification using nitrification bacteria is susceptible to changes in water temperature. The rate of reaction decreases in low temperatures and nitrification bacteria are killed at high temperatures. For good biological processing, it is recommended that the temperature of water in an aeration tank is in the range of 15 to 35°C.

  Install raw water cooling equipment or aeration tank liquid cooling equipment if the water temperature exceeds 40°C.

- **Other pretreatment**

  If the raw water contains a substance that inhibits biological processing, it must be removed. Examples include cyanide compounds and heavy metals such as hexavalent chromium. Examine in advance if the water contains any such substances.

CAUTION

- As a rule, do not directly put water that contains grease and oil into the activated sludge tank, as the surfaces of microfiltration membranes become clogged if the membrane is smeared with grease and oil such as animal and vegetable fats and oils, and mineral oils.
- Do not put an excessive amount of coagulant into the dehydrator as uncoagulated coagulant in dehydrator effluent may be absorbed into the membrane surface and cause membrane clogging. Futhermore design the system so that dehydrator effluent does not directly flow into the membrane tank.

REFERENCE

- If a large amount of surfactant is mixed into raw water, it may cause foaming in the aeration tank and cause problems such as sludge overflow.

4-2 Activated sludge

4-2-1 MLSS Concentration (Membrane Tank)

Recommended range: 5,000 to 10,000 mg/L (min: 3,000 mg/L, max: 15,000 mg/L)

As the MBR system separates liquid and solids using a membrane, there is no need to allow sludge to settle. Therefore wastewater can be treated while maintaining a high MLSS concentration. Operate the system with an MLSS concentration within the range of 5,000 to 10,000 mg/L.

CAUTION

- As the MLSS concentration in the sludge rises it also becomes more viscous, which reduces the effectiveness of membrane scouring aeration. In particular, as viscosity rises sharply if the MLSS concentration exceeds 10,000 mg/L, keep the MLSS concentration within the recommended range. However, as viscosity may be high even when the MLSS concentration is low, maintain and control the viscosity as described in 4-2-2 Sludge Viscosity.
- If the condition of the activated sludge is poor* or if the MLSS concentration is below the lower limit (for instance, during sludge acclimation), the membrane surface will become smeared with untreated organic matter as water is filtered, which accelerates a rise in trans membrane pressure, thus preventing stable operation of the product. In such cases, set the membrane flux lower than normal when operating the product.
- Before operating the system at the normal membrane flux level again (after operating with the membrane flux set lower than normal due to the above conditions), confirm that biological processing using activated sludge has been restored to satisfactory levels.

* This refers to the condition where the supernatant of activated sludge is muddy when sludge volume is measured in accordance with the Gesuishikenhoho (Japan Sewage Works Association) or JIS B9944. (Although SV30 is normally measured when measuring sludge volume, but for MBR systems which have high MLSS concentration, the mixed liquor in the aeration tank is diluted fourfold with treated water when measuring SV30.)

4-2-2 Sludge Viscosity

Recommended range: 30 mPa•s or less*

CAUTION

- When treating industrial wastewater, both MLSS concentration and sludge viscosity need to be controlled. If sludge viscosity exceeds the upper limit of the recommended range of 30 mPa•s*, membrane cleaning performance declines, which can cause sludge to widely cover the membrane surface and clog its micropores, preventing stable operation. Therefore, lower the viscosity by reducing the sludge concentration or by any other appropriate means.

* Based on measurements made using a B-type viscometer. If any other device is used, please consult its manufacturer and use the above recommended range as a reference.

4-3 Supplements

4-3-1 Antifoaming Agent

- If an antifoaming agent is to be put into aeration tank due to sludge foaming, use a high grade alcohol, ether, or ester antifoaming agent.
  Our recommended antifoaming agent is DIAFLOC AF102 (made by Mitsubishi Rayon Co.,Ltd.) If you are considering purchasing this product, please contact our sales representative.
- If foaming occurs in sludge, use physical antifoaming methods, such as spraying water on the foam surface, to minimize the amount of antifoaming agent required.

CAUTION

- The use of silicon antifoaming agents is prohibited.
  If silicon antifoaming agents are used, the antifoaming agent is absorbed into the membrane surface causing trans membrane pressure to increase. As it is difficult to clean off absorbed silicon antifoaming agents using chemicals the membrane must be replaced.

Chapter 5 Transport and Installation

This section describes handling instructions concerning transport, storage, transfer, and installation of elements and modules.

5-1 Transport and Installation

5-1-1 Notes Regarding Packing and Transport

- Elements and modules must be kept at a temperature of 5 to 40°C when being transported. Use an air-conditioned or heated trailer if this requirement may not be met.
- Transport the elements and modules in a container or equivalent in a dry condition and avoid exposure to rain and wind.
- In order to prevent load collapse and overturn, place the products on a level surface and take measures to prevent load collapse and overturn.
- If insects, mice, or other small creatures enter any of the products they may cause product damage. Avoid storing products in a place where small animals or insects may enter the products, and take measures to prevent them from entering the products.
- Excessive vibration can damage the products. Avoid transporting the products on unpaved roads when possible. If this is unavoidable, drive at a sufficiently low speed.
- Unload and transport the products cautiously and carefully. The products can become damaged if dropped.
- Modules cannot be stacked. In general, the membrane parts of modules are loaded on a pallet and wrapped, and the diffuser parts of modules are wrapped. Contact us if you need, for instance, the products to be packaged in a wooden crate.
- Refer to Table 5-1(p.32) for packaging specifications and the number of stackable elements for each type of element when elements are transported alone. Do not stack more than five elements.

WARNING

- As the modules are very heavy, when using forklifts and cranes make sure that all apparatus is inspected and certified, and all operators are certified.
- Be sure to follow all handling marks (Figure 5-2).

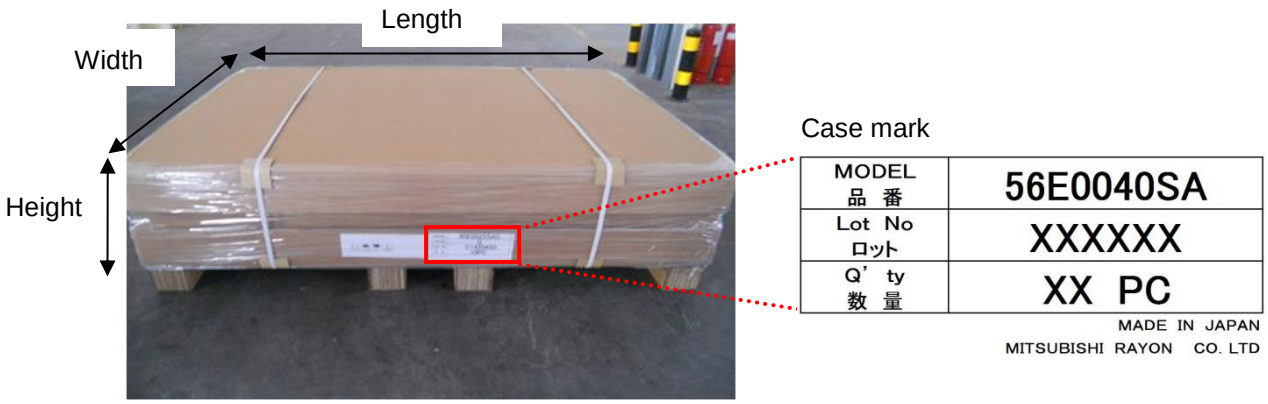

Figure 5-1 Element Packaging

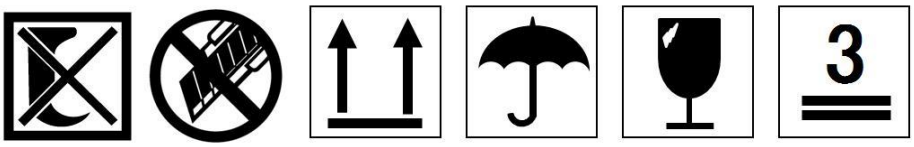

Figure 5-2 Handling marks

Table 5-1 Packaging Specifications for Membrane Elements and the Number of Stackable Elements

Number	Model Number	Quantity (pc)	Length (mm)	Width (mm)	Height(mm)	Volume(m^3)	Net Weight (kg)	Gross weight (kg)	No. of Stackable elements
1	56E0040SA	10	2,060	1,330	470	1.3	140.0	186.0	5*
		20	2,060	1,330	790	2.2	280.0	341.0	3*
2	SADF-LTSUGIGU3	20	275	385	220	0.023	2.2	3.3	—

The above numbers are subject to change without notice.

* When mixing 10-element cartons and 20-element cartons, always stack 10-element cartons on top of 20-element cartons. (See Figure 5-3)

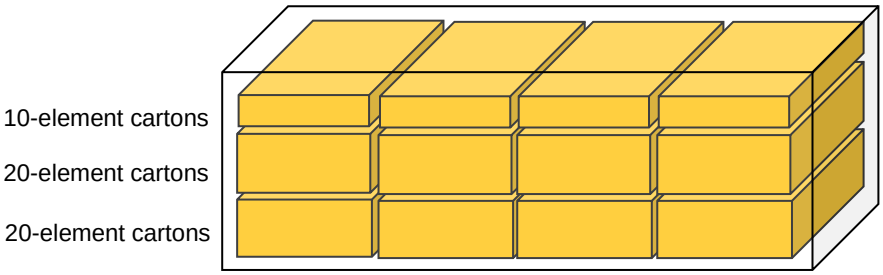

Figure 5-3 Maximum Loadable Quantity of 56E0040SA in a 20-foot Container (200 elements)

Figure 5-4 Module (membrane part) Packaging

Figure 5-5 Module (diffuser part) Packaging

5-1-2 Notes Regarding Storage

- Store the products indoors in a dry condition and avoid exposure to rain and wind.
  Do not let unused elements become damp, as storing damp elements for a long period of time may cause mold growth and a decline in permeability.
- Store elements and modules in a temperature range of 5 to 40°C.
- Store the products on a level surface to prevent them from falling over.
- If insects, mice, or other small creatures enter any of the products they may cause product damage. Avoid storing products in a place where small animals or insects may enter the products, and take measures to prevent them from entering the products.

5-1-3 Points to Consider When Preparing for Installation (Cleaning)

- Before installing modules, inspect the inside of pipes and removes foreign matter. Keep the inside of pipes, tanks, and pumps clean during installation work. Remove foreign matter and residue from installation work by cleaning them after the work is finished and by flushing pipes at the design flow rate. Then inspect the devices and equipment before starting operation. Perform cleaning and inspection similarly for raw water pumps, permeate pumps, blowers, and pipes used for chemicals.
- Remove any foreign matter larger than the openings of extra fine screens (0.5 to 1 mm) found along the filtration line between the extra fine screen and the membrane tank.
- Cover cleaned tanks with a cover or plastic sheet so that foreign matter cannot enter them.
- Do not let any matter that will damage the membrane tank or that is 1 mm or greater (see below) at any time, including during installation work. If foreign matter is mixed in, it can damage the membrane.
  ■Examples of foreign matter that can damage membranes
  - Water containing foreign matter larger than the screen openings
  - Foreign matter which is blown into or falls into the module during maintenance and repair of the upper part of the module (fallen leaves, plastic bags, etc.)
  - Residue from pipes and devices
  - Any other things such as:
    tying bands, wire bands, bolts and nuts, rulers, wires and wire fragments, drilling waste, tape fragments, welding slag, grinding waste, small branches, leaves, fish, etc.

WARNING

⃠ Be sure to remove all foreign matter as it will shorten the lifespan of the membrane.

5-1-4 Confirmation Items before Installation

Conduct thorough inspections and make records when carrying out the initial membrane installation work. Do not proceed to the module installation process until all preparations have been made.
Confirm/carry out the following.

① The membrane tank has been cleaned and foreign matter has been removed.

② All pipes and tanks including blower pipes have been flushed and cleaned.

③ The following work has been completed.

- painting
- covering
- sheet metal working
- pipe flushing
- grinding
- welding
- sand blasting
- drilling
- power tool work that generates foreign matter
- wiring
- installing guide pipes

④ Check the piping.

CAUTION

Check the piping before connecting modules.

Check that the piping has been constructed correctly.

- Line checking: Confirm whether piping is in accordance with the P&ID (piping and instrumentation diagram) by comparing the piping with the P&ID.
- Leakage test: Always conduct a leakage test for suction pipes. The pipe leakage test is important as suction pipe leaks cause mixing of suspended solids (deterioration in the turbidity of treated water) and poor suction. Perform the test at a pressure of 100 kPa or greater. Although it is preferable to perform the test for other pipes at the same time, these can be performed after the blower test is completed when the system is ready to be operated.
- Pipe flushing: Flush the inside of main pipes, including suction and discharge pipes for treated water and aeration air pipes, with water or air. Flushing is considered completed when no mixed-in waste is found using a temporary filter or other means.

⑤ Check the wiring.

Confirm that wiring has been done correctly by checking wiring numbers on the terminal board or by checking conduction.

Measure the insulation resistance of electric motors and other similar devices.

Measure the insulation of terminal boards to confirm that there are no earth faults.

⑥ Check the rotational direction of rotating devices.

Confirm the rotational direction of each motor individually. Confirm that each motor rotates in the direction indicated by the arrow. For devices where the motor is difficult to detach (such as submersible pumps), this may be done during water commissioning.

⑦ Check the sequence.

Use simulation signals to check the sequence, alarm and inter lock.

5-1-5 Installation

Follow the procedure below to install modules.

⚠ CAUTION

- Wear appropriate protective clothing including a helmet, a safety belt, safety shoes, and safety gloves.
- Use appropriate tools for tightening and loosening bolts and nuts, and handle them with due care.
- Assemble modules on a stable surface in order to prevent them from falling over.
- Use a chain or similar to prevent modules from falling over.
- Be very careful not to trap your fingers between the module and diffuser parts.
- As the modules are very heavy, when using forklifts and cranes make sure that all apparatus is inspected and certified, and all operators are certified.
- Do not climb on the modules.

1. **Receive and unload the modules.**
   Place module packages on a hard level floor not exposed to direct sunlight, humidity, rain, and excessive temperatures. Never let them freeze.
2. **Open the packages.**
   Open the packages of both the membrane and diffuser parts of the modules. Be careful not to damage the membrane modules when opening the packages.
3. **Check the products.**
   Check that elements and elbows have been correctly installed and that there are no loose bolts, nuts, etc.
4. **Assemble the modules.**
   Assemble modules by connecting the membrane part and the diffuser part of each module and attaching accessories to the module.

   ①. **Use a chain block or crane to lift up the membrane part to the top of the diffuser part.**

   ②. **Align the lot numbers of the membrane and diffuser parts.**

   ③. **Lower the membrane part onto the diffuser part.**
   Lower it carefully so as not to apply any impact to the membrane part.

   ④. **Align the tapped holes of both parts, and secure them with bolts.**
   Insert the bolts from underneath.
5. **Connect the air and filtered water hoses and the collecting pipe.**
6. **Lift and place the modules.**
   Lift modules and place them by lowering them along the guide pipe of the tank (See Figure 5-6).
   Refer to “5-2 Procedures for Lifting up Module” (p.38).

Figure 5-6 Example of Module Installation

7. **Check that the modules are level.**

   Install modules in a location with horizontality of 3 mm/1,000 mm or less. Placing modules on a surface which has a greater slope may result in uneven aeration and inadequate membrane scouring and cause membrane clogging.

   When installing several modules, ensure that the difference in height between the tops of the modules is no more than 6 mm. If the difference is higher than this, diffusion between the modules will not be uniform.

CAUTION

- Take care as modified tanks may be sloped. Make sure that diffusers in the same group are installed at the same height.

8. **Connect pipes to modules.**

   Connect pipes (suction and diffuser pipes) to modules after installation preparation, confirmation before installation, and steps 1 to 6 have been completed.

REFERENCE

- Perform conditioning after installing the modules. (See p.40 “6-1 Commissioning”)

5-1-6 Element Replacement Procedure

Replace elements in accordance with the separate “Element Replacement Manual” after confirming which membrane module model you are using.

5-2 Procedures for Lifting up Modules

When lifting up modules, for instance, when delivering them for installation, installing them, or removing them for maintenance, appropriate construction machinery, tools, and a work plan are required to ensure safety and to prevent module damage. A chain block or crane is required to lift modules.
Refer to Figure 5-7, when lifting modules: always use a balance and make sure that the minimum sling angle is 60 degrees. All modules have four or six lifting lugs for attaching lifting tools. Select a crane or chain block, a balance, wire rope, SUS chain, hooks, shackles, etc. by referring to values in Figure 5-8 and Table 5-2(p.39), in light of the working environment at the treatment plant, the state of sludge adhesion, etc. Take into account corrosion and other effects when selecting materials for chains, shackles, and other components which will be constantly immersed in sludge.

WARNING

- As the modules are very heavy, when using forklifts and cranes make sure that all apparatus is inspected and certified, and all operators are certified.
- Do not stand underneath the modules when they are being lifted.

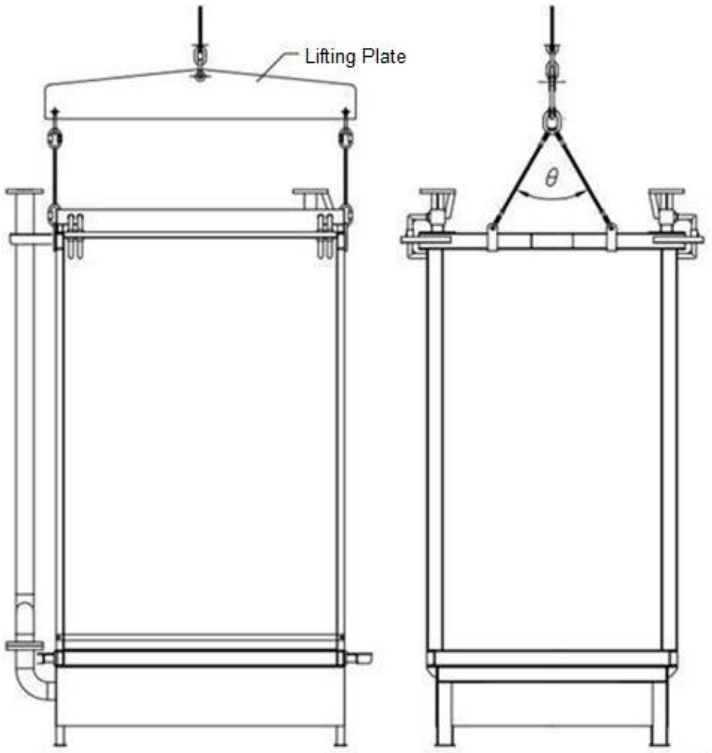

Figure 5-7 Lifting a Membrane Module

Table 5-2 Estimated Length of the Balance and Lifting Height

Module model number		56M0400FF	56M0800FF	56M1200FF	56M1600FF	56M2400FF
Lifting weight	kg	500 to 1,000	800 to 1,800	1,100 to 2,600	1,400 to 3,400	2,100 to 5,100
Maximum sling angle	degree	60	60	60	60	60
L	mm	567	1,017	1,467	1,917	2,916
D	mm	600	600	600	600	600
H	mm	2,605	2,605	2,605	2,605	2,605

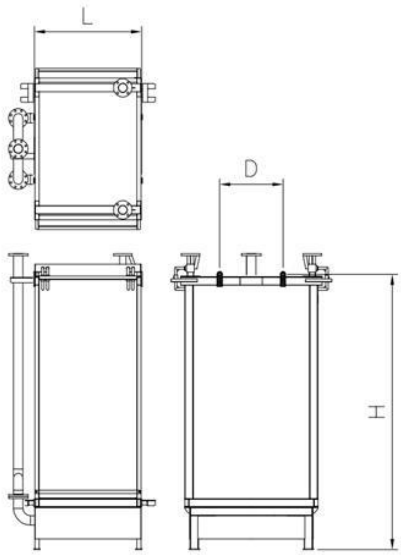

Figure 5-8 Schematic Drawing of a Membrane Module's Lifting Lugs

Chapter 6 Operation

6-1 Commissioning

Before starting water commissioning, be sure to do the following in preparation.

1. **Fill tanks with water.**
   Fill tanks with clear river water or similar up to the design water level.

2. **Check the water gauge indication and for water gauge alarms.**
   Record and adjust the actual water level indication on the water gauge when filling tanks with water to adjust the water gauge, and check for alarms.

3. **Check for water leaking from tanks.**
   Mark the water level after filling tanks to the prescribed water level and then confirm that there is no decline in water level after one day. Check for dissolution of concrete constituents as well.

REFERENCE

- As water must be drained from the tank to repair it if leaks are found, we recommend installing membrane modules after performing this inspection.

6-1-1 Water Commissioning

Carry out stand-alone commissioning for the devices below.
Stand-alone commissioning of devices: confirm that each device functions as stated in its specifications and record major data such as velocity and electric current.

1. **Take measurements and records for each device.**
   - Confirm the performance curves of fluidic devices such as pumps and blowers and record their flow rate, pressure, rotational speed, electric current, etc.
     For large rotational devices, vibration, noise, etc. may also be measured.
   - Observe and record the flow caused by aeration in tanks.

2. **Adjust measuring instruments including flow meters, DO meters, etc.**

3. **Perform automatic filtration operation.**
   Confirm that there are no suspended solids or bubbles in filtered water.

REFERENCE

- Although treated water becomes clouded immediately after the start of filtration as hydrophilizing agent applied to the membrane mixes into filtered water, it will normally become transparent in about 10 minutes. Hydrophilizing agent also causes foaming in the membrane tank to some extent, but this will disappear as hydrophilization proceeds.

4. **Carry out comprehensive water commissioning.**

   Feed water from the raw water tank or flow equalization tank to carry out commissioning of the entire system and confirm its operation.

   Successively change flux from 0.1 to 1.0 $m^3/(m^2 \cdot d)$ and confirm and record trans membrane pressure after each change.

CAUTION

- The pollution load of the hydrophilizing agent is 5 g•COD_{Cr}/m^2. Water used for water commissioning should be returned to the equalization tank, reprocessed, discharged as sewage water etc., according to relevant laws and local regulations.
- Do not use ground water that contains large amounts of iron, manganese, calcium, silica or similar for water commissioning, as these may clog the membrane.
- Do not continue water commissioning for longer than necessary. Filtering clear water for long periods of time may cause membrane clogging.
- Once the membrane has become wet, make sure that it stays wet. If wet membranes dry out, they almost completely lose their filtering abilities.

6-2 Operation Management

6-2-1 MBR Operation Management

This chapter describes general operation management procedures, caveats, and inspection items, etc. for MBR systems treating municipal wastewater*.

* Wastewater can refer to municipal wastewater and industrial wastewater.

MBR system operation must be managed in a manner specific to each individual facility. In addition, system configuration differs according to whether only BOD is treated or if nitrogen and phosphate are also removed, and maintenance to be performed etc. also differs in both cases.
As basic operation management is the same for both systems, this chapter explains the operation management of an MBR system that uses recycled nitrification processing as an example.

Design water quality for typical municipal wastewater is given in Table 6-1. The schematic diagram for an example system is shown in Figure 6-1(p.42).
The following are particularly important in operation management.

- An appropriate amount of air is uniformly discharged from the membrane module's diffuser.
- Trans membrane pressure is within the prescribed range.
  (The timing of chemical cleaning and membrane element replacement is determined on the basis of trans membrane pressure.)

Table 6-1 Example of Design Water Quality (for a septic tank)
(Treatment method: an MBR system using recycled nitrification processing)

	Raw water	Treated water
pH (－)	5.8 to 8.6	5.8 to 8.6
BOD (mg/L)	200	5 or less
COD_{Mn} (mg/L)	100	10 or less
SS (mg/L)	160	5 or less
T-N (mg/L)	45	10 or less
T-P (mg/L)	5	0.5 or less
n-Hex (mg/L)(Hexane extracts)	25	3 or less
Coloform group number (number/mL)	－	100 or less

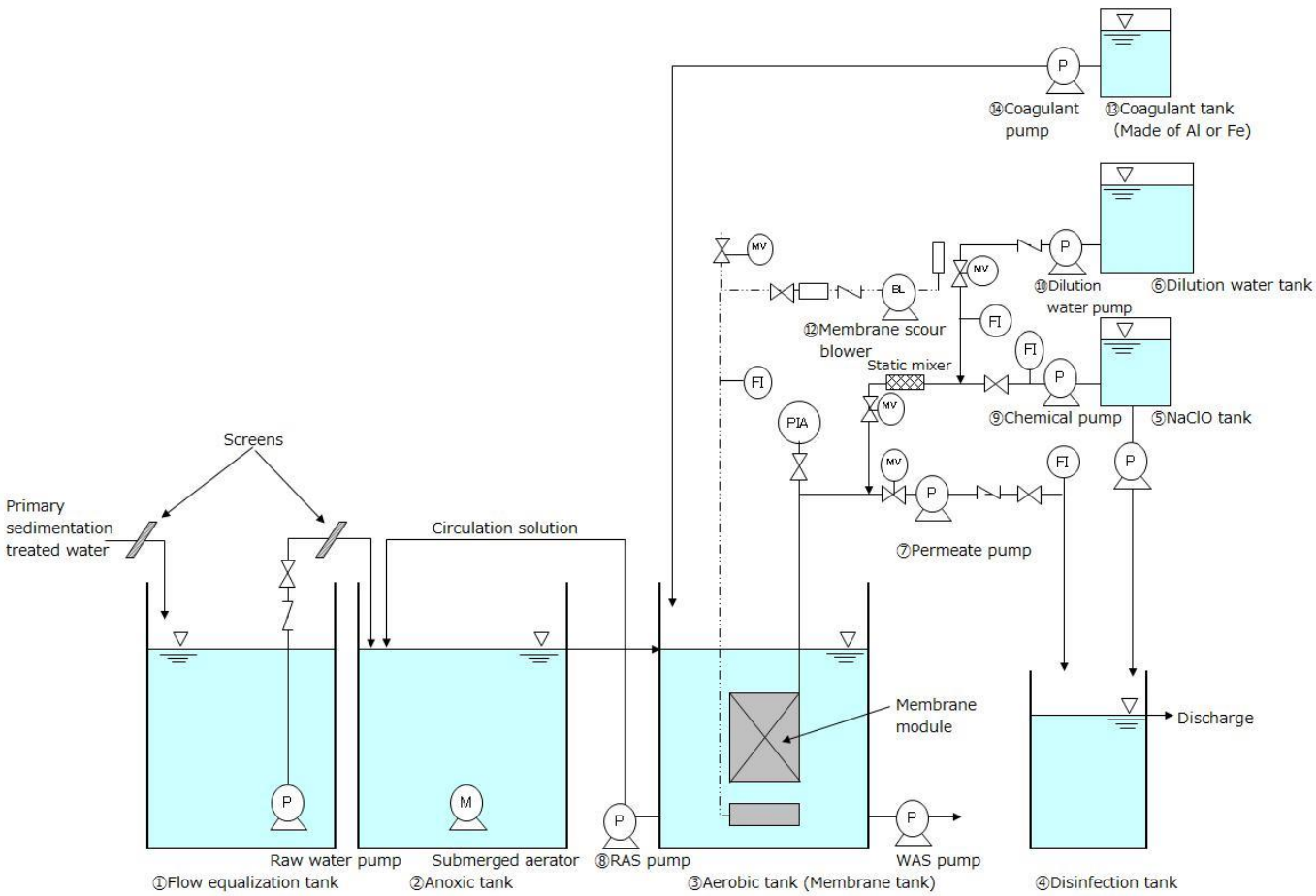

Figure 6-1 Schematic Diagram of an Example MBR System Using Recycled Nitrification Processing

6-2-2 Operation Management Procedures

This section describes example management procedures for the septic tank of MBR systems using recycled nitrification processing.
Inspection items and maintenance work are as indicated in Table 6-2. Important inspection items are screenings, DO, flux, trans membrane pressure, and the state of aeration. Maintenance inspection of these items to prevent problems leads to a reduction in running costs. Although inspection frequency differs according to the treatment facility, perform inspections at least once a week and store the inspection records in a safe place.
Items managed using measurement devices are shown in Table 6-3. Manage DO preferentially. For MLSS management, adjust the amount of sludge extraction in view of the next inspection.
Inspection items in Table 6-2 and Table 6-3 (p.44) are illustrated in Figure 6-2.

Table 6-2 Example of Inspection Items and Maintenance to Perform

Equipment	Inspection Item	Normal State	Maintenance and Inspection
Coarse screen	State of screening processing State of clogging	• Small amount of screenings deposits • No clogging	Cleaning and screenings removal
Grit chamber	State of grit chamber deposits	• Small amount of grit	Cleaning and grit removal
Fine screen	State of screening processing State of clogging	• Small amount of screenings deposits • No clogging	Cleaning and screenings removal
Flow equalization tank	Operating state of the raw water pump Water level trend State of mixing/swirl flow State of sludge and scum generation	• Design flow rate is achieved • Weekly or monthly change is small • Smooth swirl and mixing with no unpleasant odor • Small amount of sludge and scum generation	Pump inspection Water level gauge inspection Mixer inspection Cleaning sludge and scum removal
Extra fine screen	Operating state (noise, vibration, appearance･･) State of screening processing State of clogging	• Smooth operation without abnormal noise or vibration • Small amount of screenings deposits • No clogging	Immediate repair and replacement in response to maloperation due to failure Cleaning, screenings and substance removal
Anoxic tank	Mixing state State of bubble and scum generation ORP measurement	• Smooth mixing • Small amount of bubbles and scum • Within the proper range	Mixer inspection Cleaning and scum removal MLSS adjustment
Aerobic tank (membrane module)	Aeration state Aeration amount State of bubble and scum generation Permeate pump and the circulation pump Operating state of each measurement device Check sludge concentration Water level state Check trans membrane pressure Check membrane filtered water Check DO	• Smooth and even swirl • Proper flow rate • Small amount of bubble and scum • Normal flow rate and operating cycle • Proper measurement values obtained and the preset values maintained • Within the specified range • Water level maintained meets the specified value • No drastic changes and at or below the specified value • Transparent with no suspended solids • Within the proper range	Blower and diffuser parts inspection Flow rate adjustment Cleaning and scum removal Flow rate adjustment Pump inspection Inspection and calibration of measurement devices Sludge extraction and adjustment of extraction amount Water gauge level inspection Membrane cleaning Inspection of membrane and pipes Air flow rate adjustment

Equipment	Inspection Item	Normal State	Maintenance and Inspection
Disinfection tank	Check chlorinated compound (if solid chlorinated compound is used)	• Sufficient amount of chlorinated compound	Chlorinated compound replenishment
NaClO tank	State of remaining amount	• At or above the specified volume	NaClO replenishment
Dilution water tank	State of water level	• At the specified water level	Inspection of the feedwater line
Coagulant tank	State of remaining amount	• At or above the specified volume • Coagulant consumed as specified	Coagulant replenishment Flow adjustment of the coagulant injection pump

Table 6-3 Items Controlled Using Measurement Devices and Responses to be Taken

Object	Control Range	Outside the Controlled Range	Response
Trans membrane pressure	Initial value -15 kPa or higher	Initial value -15 kPa or lower	Perform maintenance cleaning (automatic)
Membrane scour aeration amount	Calculated at 75 to 150 $m^3/(m^2 \cdot h)$	75 $m^3/(m^2 \cdot h)$ or less 150 $m^3/(m^2 \cdot h)$ or more	Increase the air flow rate Decrease the air flow rate
Filtration flow rate	Calculated using the set value (0.2 to (0.8) m/d)	At or above the set value At or below the set value	Decrease the filtration amount Increase the filtration amount
DO (Aerobic tank)	About 1 to 4 mg/L	1 mg/L or less 4 mg/L or more*	Increase the air flow rate. Reduce the MLSS concentration (within the control range). Reduce the air flow rate. Increase the MLSS concentration (within the control range).
MLSS	About 5,000 to 10,000 mg/L	5,000 mg/L or less 10,000 mg/L or more	Decrease the amount of sludge extraction. (Take note of a lack of a DO due to an increase in MLSS concentration.) Increase the amount of sludge extraction. (Take note of an increase in DO due to a decrease in MLSS concentration.)
ORP (Anoxic tank)	About -200 to 0 mV	-200 mV or less 0 mV or greater	(To prevent putrefaction) Increase DO, decrease the MLSS concentration, and increase circulation ratio in the aerobic tank. Decrease DO, increase the MLSS concentration, and decrease circulation ratio in the aerobic tank.

* DO in membrane tanks of separate MBR systems tends to be 4 mg/L or greater, in which case, determine the air flow rate with a priority on ensuring the air flow rate for membrane cleaning, leaving DO as it stands.

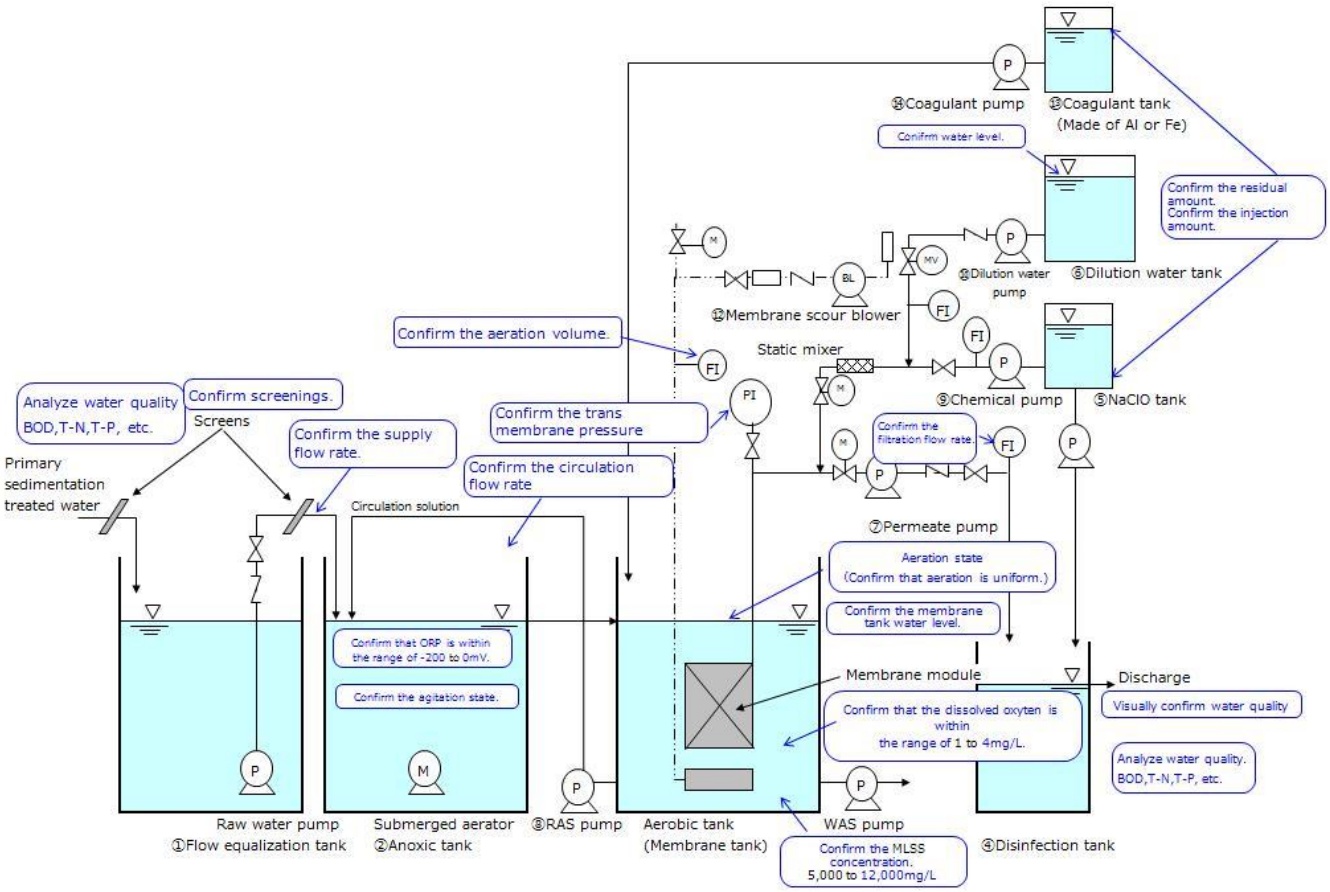

It is important to control the inspection items illustrated above to operate an MBR system in a stable condition.
In particular, controlling the suction differential pressure is important. (Perform chemical cleaning before the suction diffrential pressure becomes larger than the initial differential pressure by 15 kPa or greater.)
The aerobic tank water level, MLSS concentration, the aerobic tank aeration volume, etc. are important inspection items required for the stable operation of the membrane.

Figure 6-2 Diagram of Operation Management Procedures

6-2-3 Operation Management Record

Create an operation management recording sheet for routine maintenance. Keeping a record can be helpful in determining the cause of problems.
An example of an operation management recording sheet is given in Figure 6-3. This check list is only an example. Change it appropriately in accordance with your system. We strongly recommend managing measurement values for trans membrane pressure, water temperature, water quality, etc. using a spreadsheet program and create graphs from this data.

Always record the following requisite items and keep the record. Take measurements at least once a week.

- Inspection items concerning extra fine screens, aerobic tanks, and membrane tanks (The same tank may serve as an aerobic and membrane tank).
- Water temperature in the membrane tank, trans membrane pressure, filtration flow rate, suction cycle, DO, air flow rate to modules, and MLSS concentration
- Results of the analysis of the quality of raw water and treated water: BOD, COD, and n-Hex extracts are required
- Record of chemical cleaning (types of chemical cleaning, type/concentration of chemical, and trans membrane pressures before and after cleaning)
- Maintenance and repair record

Plant name				Inspection Date	Time/Day/Date/Month/Year
Weather		Temperature	℃	Inspector	Seal

Inspection of each part

	Inspection item	○×	Action
Coarse screen	State of clogging and screening		
Grit chamber	Deposition state in a grit chamber		
Fine screen	State of clogging and screening		
Flow equalization tank	Raw water pump		
	Water gauge		
	Submerged mixer		
	State of sludge and scum generation		
Extra fine screen	Operating state		
	State of clogging and screening processing		
	Clogging state		
Anoxic tank	Mixing state		
	State of sludge and scum generation		
	Operating state of each measurement device		
	Water level		
Aerobic tank(Membrane separation device)	Aeration state		
	State of sludge and scum generation		
	Membrane filtration pump		
	Circulation pump		
	Membrane blower		
	Operating state of each measurement device		
	Water level		
	Confirmation of membrane filter water		
Sludge storage tank	Blower		
	Water level		
	State of scum generation		
	Odor		
Disinfection tank	Confirmation of residual chlorine		
	Clearness and transparency of treated water		
NaClO tank	Residual amount		
Coagulant tank	Residual amount		
Dilution water tank	Water level		

Inspection measurement

	Measurement items	Measured value
Anoxic tank	Water temperature	℃
	MLSS	mg/L
	ORP	mV
	p H	
	DO	mg/L
Aerobic tank (Membrane separation device)	temperature	℃
	Trans membrane pressure	k Pa
	Filtration flow rate	m^3/hr
	Suction suspension cycle	Suction minutes: Suspension minutes
	DO	mg/L
	Blow volume	m^3/hour
	MLSS	mg/L
	Circulated sludge flow rate	m^3/hour

Water quality analysis

Item	Raw water	Treated water
pH		
BOD(mg/L)		
COD(mg/L)		
SS(mg/L)		
T-N(mg/L)		
NO_2-N(mg/L)		
NO_3-N(mg/L)		
NH_4-N(mg/L)		
Organic-N(mg/L)		
T-P(mg/L)		
n-Hex(mg/L)		

Remarks

Figure 6-3 Operation Management Record Sheet (Example)

6-3 MBR System Operation

6-3-1 Seeding Input

Seeding is put into the MBR system when it starts up.
Activated sludge from a plant which uses municipal wastewater as raw water and employs a screen with relatively small openings for pretreatment is suitable as seeding. Highly concentrated sludge such as return sludge is suitable when ease of transport and usability are considered.
An MLSS concentration of 3,000 mg/L or more is recommended to decrease MBR start up time, and make membrane filtration easier. If a sufficient amount of seeding cannot be acquired, and the MLSS concentration cannot be maintained (1,000 to 3,000 mg/L), supply raw water while taking the BOD-MLSS load into account. (A BOD-MLSS load of 0.15 kg-BOD/kg-MLSS/day or below is recommended.)
If the MLSS concentration is lower than 3,000 mg/L, for instance, when the system starts up, set the membrane flux lower than normal and gradually increase the MLSS concentration.
Membrane flux at start-up

(Reference value) = (Design membrane flux) × (Current MLSS concentration) / (Design MLSS concentration)

Sludge input is calculated using the following formula.

Seeding Amount Q = (Q1 + Q2) × n ÷ n´
Q1: Anoxic tank capacity
Q2: Aerobic tank capacity
n: Target MLSS concentration
n´: Seeding concentration (n´ > n)

BOD-MLSS load is calculated using the following formula.

BOD-MLSS Load =
[Raw water BOD concentration (mg/L) × Treatment volume (m^3/day)] ÷ [Aerobic tank capacity(m^3) × Aerobic tank MLSS concentration (mg/L)]

Record sludge properties such as seeding concentration (MLSS and MLVSS), pH, filter paper filtration measurement, and viscosity as basic data.

CAUTION

- If sludge from a sludge storage tank is used, use it only after confirming that the sludge is not putrefied.
- Do not allow any raw sludge extracted from a primary sedimentation tank to be mixed into seeding.
- Remove screening using an extra fine screen or similar before putting seeding into the system.

6-3-2 Starting Operation

Follow the procedure below to start operation.

1. **Discharge water used for water commissioning using a RAS pump, sludge withdrawal pump or a temporary pump.**

   CAUTION

   - Do not use a permeate pump to discharge the water.

2. **Put seeding into the tank.**

3. **Start filtration operation.**

   Start filtration operation after activating the anoxic tank mixer, the circulation pump, and the blower to mix water and sludge well.

CAUTION

- For each device, ensure that the water level is at or above the minimum water level at which the device can be operated, and then activate the devices in order.
- If seeding is diluted by raw water, perform aeration and start filtration after soluble BOD is sufficiently processed.
- Starting filtration operation when soluble BOD remains may cause a rise in trans membrane pressure and membrane clogging. Estimate whether dissolved BOD has been processed or not on the basis of raw water BOD concentration, sludge concentration, and tank capacity or by COD pack testing.

4. **Transition to Steady Operation.**

   When the MLSS concentration of the aerobic tank reaches about 5,000 to 6,000 mg/L, start extracting sludge.

   Adjust the amount of excess sludge extraction so that the MLSS concentration stays within the specified range.

6-3-3 Problems at Start-Up and Responses

- **Foaming**

  Use an alcoholic, ether, or ester antifoaming agent if foaming occurs. Do not use silicon antifoaming agents, as they cause membrane clogging.

- **pH decrease**

  A pH decrease may occur due to progress in nitrification or a lack of denitrification. Check the DO of the aerobic tank and ORP of the anoxic tank and adjust the aeration volume and the sludge circulation volume or perform intermittent operation of the blower. Note that pH is particularly subject to variation at start-up.

- **Nitrogen removal rate not attained**

  The following are causes of high T-N concentration in treated water:

  - Lack of progress in nitrification reaction
  - Lack of progress in denitrification

  Measure NO_3-N and NH_4-N in treated water first to identify the cause.

  If NH_4-N remains in treated water, a lack of progress in the nitrification reaction is considered to be the cause. Nitrification will not progress well at the early stage of operation due to a low concentration of nitrification bacteria. However, if the aerobic tank's DO is maintained at 1 mg/L or greater, nitrification bacteria will multiply as they acclimatize, to facilitate the nitrification reaction.

  If there is little NH_4-N and more NO_3-N than the theoretical value, a lack of progress in denitrification is considered to be the cause. Denitrification tends not to occur in the anoxic tank at start-up due to a low MLSS concentration. Normally, this improves with a rise in MLSS concentration.

Chapter 7 Troubleshooting

7-1 Troubleshooting: Examples

Problems can be roughly classified into those related to devices and those related to effluent quality. It is important to respond promptly to problems when they arise.
Examples of problems and responses to them are shown in Table 7-1 and Table 7-2(p.50).

Table 7-1 Examples of Device Related Problems and Responses

Inspection Location	Problem	Cause(s)	Response(s)
Inlet	Sewage is overflowing through the screen.	The screen is clogged.	Clean the screen surface.
Flow equalization tank	The liquid level in the tank is abnormally high.	Abnormal increase in raw water volume. Failure of raw water pump. Decline in filtration amount.	Reduce raw water volume. Increase membrane filtration velocity (within the control range). Perform inspection and repair. See the section about the aerobic tank in this table.
	Water is not mixed.	Failure of the submerged mixer.	Perform inspection and repair.
Anoxic tank	The liquid level in the tank is abnormally high.	Decline in the treatment capacity of the membrane module.	See the section about the aerobic tank in this table.
	Water is not mixed.	Failure of the submerged mixer.	Perform inspection and repair.
Aerobic tank (membrane module)	Decline in filtration amount.	Failure of the permeate pump.	Perform inspection and repair. Adjust to the proper flow rate.
	Treated water is not sucked by the permeate pump.	Insufficient airtightness of pipes. Air pockets in pipes.	Inspect the connection and tighten bolts and nuts. Remove air from pipes.
	Trans membrane pressure rises faster and chemical cleaning is performed more frequently than standard.	Membrane flux is too high.	Adjust the permeate pump to an appropriate volume.
		Membrane surface may be clogged.	Adjust the air flow of the membrane scour blower to a proper value. Perform membrane cleaning.
		MLSS is too high.	Adjust the discharge volume in the circulation pump to a proper value. Increase the amount of excess sludge extraction.
		Clogged by inorganic matter.	Perform acid cleaning.
	Foaming is so intense that bubbles scatter outside the tank.	Mixing in of a large amount of detergent. Degradation in sludge properties.	Use an antifoaming agent. Reduce raw water load, etc.
	Activated sludge is not mixed.	Failure of the blower.	Perform inspection and repair.
	The liquid level in the tank is abnormally high.	Abnormality in the permeate pump. Failure of the water level gauge.	Perform inspection and repair. Adjust the filtration flow rate to a proper value. Perform inspection and repair.

Table 7-2 Examples of Effluent Quality Related Problems and Responses

Item	Probable Cause(s)	Response(s)
BOD COD	Abnormal quality of incoming raw water. Decline in MLSS. Lack of aeration.	Check the quality of raw water. Adjust amount of sludge extraction. Adjust the air flow rate to a proper value (proper value: DO > 1mg/L).
SS Turbidity	Damage or disconnection of pipes on the suction side. Membrane leakage.	Inspect and repair pipes on the suction side. Inspect the membrane for leaks, then repair or replace the membrane. Remove any foreign matter in the tank.
T-N	If denitrification is insufficient,*1 -Abnormal quality of incoming raw water. -Poor mixing in the anoxic tank. -Decline in the MLSS concentration. -Rise in the ORP value. -Poor circulation of activated sludge. If nitrification is insufficient,*2 -Abnormal quality of incoming raw water. -Decline in MLSS concentration. -Lack of aeration. -Poor circulation of activated sludge.	 Check the quality of raw water. Check the operating state of the submerged mixer in the anoxic tank. Decrease the amount of sludge extraction. (Take note of a lack of DO due to an increase in the MLSS concentration.) Adjust the ORP value so it is in the proper range. Adjust the circulation pump flow rate. Check the quality of raw water. Decrease the amount of sludge extraction. (Take note of a lack of DO due to an increase in the MLSS concentration.) Adjust the air flow rate to make DO fall in the proper range. Adjust the circulation pump flow rate.
T-P	Abnormal quality of incoming raw water. Insufficient addition of coagulant.	Check the quality of raw water. Inspect and repair coagulant pipes. Adjust the amount of coagulant added.
Hexane extracts	Abnormal quality of incoming raw water. Decline in MLSS concentration.	Check the quality of raw water. Decrease the amount of sludge extraction. (Take note of a lack of DO due to an increase in the MLSS concentration.)
Total coliform	Lack of sterilizer. Leakage of the suction pipe. Membrane leakage.	Replenish sterilizer. Inspect and repair suction pipes. Inspect the membrane for leaks, then repair or replace the membrane.

＊1 If, taking design water quality (Table 6-1 Example of Design Water Quality (for a septic tank))as an example, if NO_3-N in treated water is 15 mg/L or greater (depending on circulation ratio and other factors).

＊2 If, taking design water quality (Table 6-1 Example of Design Water Quality (for a septic tank))as an example, if NH_4-N in treated water is 2 mg/L or greater.

Chapter 8 Maintenance

8-1 Membrane Repair

Described below is the procedure for repairing membranes with epoxy resin adhesive when a hollow fiber membrane in the element is damaged during operation or sampled for analysis.

First, prepare the following 3 items.

- Water resistant, two-part cold-setting epoxy resin adhesive (One that sets within an hour is recommended.)
- Cutting nippers (or scissors)
- Paper towels, tissue paper, or clean waste cloth (referred to as “paper” hereinafter)

Follow the procedure below to repair the membrane.

WARNING

- If the epoxy resin adhesive used gets into your eyes, please take appropriate steps following the instruction manual for the resin.

CAUTION

- It may take significantly longer for the adhesive to set in low temperatures. If repair is to take place at a temperature of 10°C or below, use an epoxy resin adhesive that sets quickly or repair the membrane indoors.
- Do not allow elements to dry out. If elements dry out, they must be rehydrophilized.

1. **Wash the element to remove any sludge adhered to it.**
2. **Cut the hollow fiber requiring repair at around 30 to 50 mm from the potting end face.**
3. **Use paper to remove water from the tip of the cut membrane, then insert paper at the root of the membrane to make the tip of the fiber protrude from the surface and fix it in that state.**

   CAUTION

   - Rubbing hollow fiber membranes strongly with paper may damage the membrane surface. Hold paper against the membrane to soak up any water.

4. **Follow the instruction manual for the epoxy resin adhesive used when doing the following work. Mix the base resin and the accelerator, then dip a skewer or similar into the epoxy resin, and apply a bead of resin to the tip of the hollow fiber so it looks like the head of a match (Figure 8-1 below). Adjust the amount of the epoxy resin adhesive to be applied to prevent dripping. It may be applied twice, or when it becomes viscose to some extent.**
5. **Touch the resin to confirm that it is no longer sticky. Then remove the paper and re-install the element in the module.**

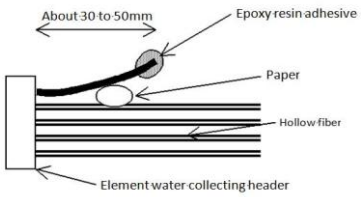

Figure 8-1 Schematic Diagram of the Membrane Repair Procedure

8-2 Diffuser Cleaning

This section describes the procedure for cleaning clogged SUS perforated pipe diffusers in modules to eliminate clogging substances.

First, prepare the following protective clothing and tools.

- Helmet
- Safety belt
- Protective gloves
- Safety goggles
- Two wrenches (M10, 16)
- Pipe wrench
- Waste cloth

Follow the procedure below to clean the diffuser.

CAUTION

- Be careful not to damage the membrane.
- As the modules are very heavy, when using forklifts and cranes, make sure that all apparatus is inspected and certified, and all operators are certified.
- Do not climb on the diffuser.

1. **Lift the module and place it on a level, stable surface to prevent it from falling over.**

   CAUTION

   - Take appropriate measures after lifting up the module, throughout cleaning, and until the module is restored, such as setting up a fence to stop the module from falling into the tank, a cover and danger markings.
   - Be careful when working on a concrete floor or iron plate as they may be slippery.
   - Confirm that appropriate steps have been taken to prevent wastewater from cleaning flowing out of the premises.
   - Take steps to stop the module from falling over.

2. **Remove the air and filtered water hoses, the flanges of the main pipe and the plug at its tip.**
3. **Separate the membrane and diffuser parts of the module.**
4. **Flush accumulated sludge in the diffuser using a nozzled water hose or similar.**
5. **Visually inspect the inside of the diffuser after cleaning to confirm that the diffuser holes are open.**
6. **Attach the flanges to the main pipe and the plugs to its tips.**

   Use sealing tape when attaching the plugs.
7. **Connect the membrane and diffuser parts of the module. Align the lot numbers on both parts when connecting them.**

   See “5-1-5 Installation” (p.36)
8. **Connect the air and filtered water hoses.**
9. **Return the module to the tank and connect the filtered water pipes and diffuser pipes.**
10. **Perform aeration to confirm that the module is aerated uniformly from the top.**

8-3 Procedure for Long-term Storage of Used Modules

- Store modules used in the MBR system in a wet condition if they are to be stored for a long period of time.
- Fouling substances remain on the surface of hollow fiber membranes even if they have been washed with clean water and appear clean. If the module is then dried and stored, sludge and fouling substances will harden and become fixed to the membrane surface like a mud cake, and will become clogged easily when it is used again. Fouling substances which have hardened may not easily soften, and may not be fully removed by chemical cleaning.
  Follow the following procedure when storing modules in a wet condition for a long period of time.

1. **Remove the module from the tank and wash it with water. Then perform chemical soak cleaning.**
2. **After chemical soak cleaning, fill a tank with tap water (or any water of comparable quality) and immerse the module in it. Store the module in a cool dark place not exposed to direct sunlight.**
3. **When storing a module for a long period of time, change water 1 to 4 times a month to prevent microorganisms from multiplying in the water and causing putrefaction. Take care not to let water in the tank freeze in cold locations.**
4. **When a stored module is to be used again, perform chemical soak cleaning on it with approx. 3,000 mg/L NaClO outside the system. The modules must be cleaned as microorganisms may have adhered to the surface of the elements. The cleaning procedure is the same as that for normal chemical cleaning.**

CAUTION

Drying an element once used may reduce its hydrophilicity and cause a significant rise in trans membrane pressure. In this case, it must be rehydrophilized before it is reused. Contact our staff for details regarding out rehydrophilizing.

Chapter 9 Reference materials

9-1 Glossary

- **Hollow-fiber membrane**

  Hollow-fiber membranes are membranes that have been molded into a hollow fiber shape. Membranes with a diameter larger than 5 mm are classified as tubular membranes.

- **MBR (membrane bioreactor) (See p.6 “1-1 Overview of MBR”)**

  MBR is a biological treatment process for solid-liquid separation of organic wastewater in which the final sedimentation tank used for activated sludge processing in conventional systems is replaced by membrane processing. Microfiltration membranes (MF membrane) and ultrafiltration membranes (UF membrane) are mainly used as separators. MBR provides improved sewage treatment, can be used to downsize and simplify treatment facilities, and treated water can be re-used.

- **Membrane separation device (module)**

  Membrane separation devices (modules) consist of a membrane part composed of hollow-fiber membranes, and a diffuser.

  The membrane part is made of elements (the smallest type of membrane material) made of integrated hollow-fiber membranes and channels, assembled within a frame.

  Aeration from the diffuser part cleans the hollow-fiber membranes to enable stable filtration. (See p.14 “2-2 Membrane Scour Aeration Devices”)

  A variety of modules are available with different element sizes and number of elements. (See p.57 “Chapter 10 Specifications”)

Module(56M0800FF)

Element(56E0040SA)

- **Flux (See p.12 2-1-2 “Configuring Flux Settings”)**

  Flux is the speed at which water permeates the membrane. It is calculated by dividing the filtration flow per unit time by the membrane surface area.
  It is also referred to as linear velocity (LV).
  Standard flux for the product is 0.2 to 0.8 $m^3/(m^2 \cdot d)$ (reference value). Design flux differs according to the properties of the raw water used.
  In some cases the flux expressed in liters of membrane surface area, per hour, $[l/(m^2 \cdot h)]$ (or LMH).

- **Chemical Cleaning (See p.17 “3-1 Chemical Cleaning”)**

  Chemical cleaning is a type of cleaning that uses chemicals to restore membrane filtration performance that has become inhibited due to fouling, and to maintain hygienic conditions inside the filtration device.
  Chemical cleaning is performed either by washing the permeate side (inner side of the membrane) with a chemical solution in place (cleaning in place, CIP), or by soaking the module or element directly in a chemical solution (chemical soak cleaning).
  There are two types of cleaning in place: maintenance cleaning that is performed regularly for stable operation of the product, and recovery cleaning performed in order to restore trans membrane pressure.

- **Raw Water (See p.28 “4-1-1 Pretreatment of Raw water”)**

  Although the term “raw water” is generally used to refer to wastewater that enters treatment facilities, it is used in this manual to refer to wastewater pretreated using bar screens or similar methods.

* The terms in this glossary are defined based on how they are used in this manual. These definitions and uses may differ from standard ones. For general terms related to wastewater treatment, refer to the following.

<u>Reference</u>
Gesuido Yogoshu <u>Sewage Terms Glossary</u> 2000 Edition (in Japanese only) Japan Sewage Works Association

9-2 List of Consumables

A list of consumables is given in Table 9-1. Use this as a guide to when the consumables need replacing. As the life of each part differs according to raw water conditions, conditions of use, and the environment, inspect and check the items.

Table 9-1 List of Consumables

Item	Estimated replacement period*
Membrane module	Every 15 years
Membrane element	Every 5 to 10 years
Permeate adapter	Replace it at the same with the element
Separator	Replace it at the same with the element

* Replacement frequency may vary according to raw water conditions, conditions of use, and the environment.
No guarantee is hereby provided.

9-3 Chemical Resistance of the Product

The chemical resistance of the product is shown in Table 9-2. Only use the product in MBR systems for organic wastewater whose main constituent is water. Do not use chemicals other than those listed in ”3-1 Chemical Cleaning” (p.17) of this manual.

Table 9-2 Chemical Resistance of the Product

Acid		
Acetic acid	5 wt%	○
Hydrochloric acid	5 wt%	○
Sulfuric acid	5 wt%	○
Oxalic acid	2 wt%	○
Citric acid	2 wt%	○
Alkaline		
Sodium hydroxide	4 wt%	×
Alcohol		
Ethanol	30 wt%	○
Organic solvents in general		
Esters		×
Ketones		×
Halogenated hydrocarbon		×
Kerosene		×
Gasoline		×
Other liquid		
Sodium hypochlorite(NaClO)	3000 mg/L	○
Sea water		△
Tap water		○

◎: May be used during operation.
○: Can be used for a short period of time such as for chemical cleaning.
△: Cannot be used in principle. (Consult with us about conditions under which it may be used.)
×: Cannot be used.

Chapter 10 Specifications

10-1 Element Specifications

Product specifications for membrane elements are given below.
Specifications indicated in this manual may be subject to change without notice.

Table 10-1 Element Specifications

Item		Unit	Specifications
Element model number		—	56E0040SA
Nominal membrane surface area		m^2	40
Direction of hollow fiber membrane		—	Vertical
Material	Hollow fiber membrane	—	PVDF (polyvinylidene fluoride)
	Potting resin	—	Polyurethane resin
	Reinforcing resin	—	Polyurethane resin
	Water collection pipe	—	ABS Resin
	Support pipe	—	SUS304
Nominal pore size		μm	0.05
Outer diameter of hollow fiber membrane		mm	1.65
Element dimensions (D×W×H)		mm	30 × 1,250 × 2,000
Dry weight		kg	Approx. 15
Connection		mm	φ24 × 2 locations Upper element permeate header/lateral
Operating conditions	Design filtration flow*	m^3/(day・element)	5 to 20
	Filtration mode	—	Submerged suction filtration (out-in filtration)
	Normal trans membrane pressure	—	Initial trans membrane pressure: -15 kPa or above
	Normal temperature	℃	5 to 40
	pH range of raw water	—	5 to 9
	Oil content range of raw water	—	Normal hexane extracts 150 mg/L or below (excluding mineral oils)
	pH range for cleaning	—	1 to 11
	MLSS range (Membrane Tank)	mg/L	Recommended range of application: 5,000 to 10,000 (min: 3,000, max: 15,000)
	Other		Silicon antifoaming agents may not be used.

* Design filtration flow is calculated based on the assumption that flux is between 0.2 and 0.8 $m^3/(m^2 \cdot d)$. It differs according to the raw water conditions, operating temperature, etc.

10-2 Module Specifications

Product specifications for modules are given below.
Specifications indicated in this manual may be subject to change without notice.
Please select a hoist and other equipment for lifting modules while taking the weight of the module, chains and connecting pipes into account. If the product has been operated at a trans membrane pressure significantly beyond the range specified in this manual, it is possible that an extreme amount of clogging has occurred, which may cause the product to exceed its wet weight.

Table 10-2 Module Specifications List (Element used: 56E0040SA)

Item			Unit	Specifications				
Module model number			—	56M0400FF	56M0800FF	56M1200FF	56M1600FF	56M2400FF
Element	Model no.		—	56E0040SA				
	No. of elements		pcs.	10	20	30	40	60
	Dimensions (D×W×H)		mm	30 × 1,250 × 2,000				
	Nominal membrane surface area		m^2	40				
Module	Module membrane surface area		m^2	400	800	1200	1600	2400
	Dimensions	Depth	mm	1,524	1,524	1,524	1,524	1,524
		Width	mm	940	1,390	1,870	2,320	3,416
		Height	mm	2,798	2,798	2,798	2,798	2,798
	Weight	Dry	kg	400	600	800	1,000	1,550
		Lifting*1	kg	500 to 1,000	800 to 1,800	1,100 to 2,600	1,400 to 3,400	2,100 to 5,100
	No. of permeate adapters required		pairs	20	40	60	80	120
	Connection to treated water (JIS10K)		—	65A Flange × 2	65A Flange × 2	65A Flange × 2	65A Flange × 2	65A Flange × 4
	Guide pipe specifications		—	50A	50A	80A	80A	80A
Diffuser part	Diffuser	Model number	—	FB-10W	FB-20W	FB-30W	FB-40W	FB-60W
	Connection (JIS10K)			80A Flange	80A Flange	80A Flange	80A Flange	80A Flange × 2
Diffuser air	Minimum aeration rate		Nm^3/min	0.8	1.5	2.2	2.9	4.4
	Maximum aeration rate		Nm^3/min	1.7	3.1	4.5	5.9	9.0
	Standard aeration rate		Nm^3/min	1.5	2.7	3.8	5.0	7.7
	Diffuser pressure loss (Maximum)		kPa	1.1	1.1	1.1	1.1	1.1
Minimum water depth			m	3.0	3.0	3.0	3.0	3.0
Standard center-to-center distance for modules		Depthwise		2.2 m or greater (The wall-to-c enter distance for modules adjacent to walls must be 1.1 m or greater.)				
		Widthwise		Secure a sufficient distance for tying in pipes or lifting the module.				
Operating conditions	Filtration mode		—	Submerged suction filtration (out-in filtration)				
	Normal trans membrane pressure		—	Initial trans membrane pressure: -15 kPa or above				
	Normal temperature		℃	5 to 40				
	pH range of raw water		—	5 to 9				
	Oil content range of raw water		—	Normal hexane extracts 150 mg/L or below (excluding mineral oils)				
	pH range for cleaning		—	1.0 to 11.0				
	MLSS range (Membrane Tank)		mg/L	Recommended range of application: 5,000 to 10,000 (min: 3,000; max: 15,000)				
	Design filtration flow*2		m^3/(day・module)	80 to 320	160 to 640	240 to 960	320 to 1,280	480 to 1,920
	Other		—	Silicon antifoaming agent may not be used.				

＊1 Reference lifting weight when wet. The actual lifting weight differs according to the operating conditions and the amount of adhered sludge.

＊2 Design filtration flow is calculated based on the assumption that flux is between 0.2 and 0.8 $m^3/(m^2 \cdot d)$. It differs according to the raw water conditions, operating temperature, etc.

Standard accessories

- Water collection adapter (permeate adapter)

Accessories not included

- Guide rail
- Chains and shackles
- Chain blocks and cranes
- Slings and lifting beams
- Filtered water hose and pipes, air hose and pipes
- Protective sheets and covers

STERAPORE 5600 Series (FF) Instruction Manual

2nd Edition, July 2015

----------For inquiries, please contact:

MITSUBISHI RAYON AQUA SOLUTIONS CO., LTD.
Membrane Department
Membrane Division

10F Gate City Ohsaki East Tower, 1-11-2 Osaki, Shinagawa-ku, Tokyo,
141-0032, Japan
TEL: 81-3-6748-7467 / FAX: 81-3-5487-7527